GSM TELEPHONE

SGH-P260

SERVICE Manual

GSM TELEPHONE

CONTENTS

1. Safety Precautions
2. Specification
3. Product Function
4. Array course control
5. Exploded View and Parts list
6. MAIN Electrical Parts List
7. Block Diagrams
8. PCB Diagrams
9. Flow Chart of Troubleshooting
10. Reference data
11. Disassembly and Assembly Instructions

SAMSUNG
ELECTRONICS

GSPN (Global Service Partner Network)

Country	Web Site
North America	service.samsungportal.com
Latin America	latin.samsungportal.com
CIS	cis.samsungportal.com
Europe	europe.samsungportal.com
China	china.samsungportal.com
Asia	asia.samsungportal.com
Mideast & Africa	mea.samsungportal.com

This Service Manual is a property of Samsung Electronics Co.,Ltd.
Any unauthorized use of Manual can be punished under applicable
International and/or domestic law.

©Samsung Electronics Co.,Ltd.

2007. 08. Rev.1.0

2. Specification

2-1. GSM General Specification

	GSM900 Phase 1	EGSM 900 Phase 2	DCS1800 Phase 1	PCS1900
Freq. Band[MHz] Uplink/Downlink	890~915 935~960	880~915 925~960	1710~1785 1805~1880	1850~1910 1930~1990
ARFCN range	1~124	0~124 & 975~1023	512~885	512~810
Tx/Rx spacing	45MHz	45MHz	95MHz	80MHz
Mod. Bit rate / Bit Period	270.833kbps 3.692us	270.833kbps 3.692us	270.833kbps 3.692us	270.833kbps 3.692us
Time Slot Period / Frame Period	576.9us 4.615ms	576.9us 4.615ms	576.9us 4.615ms	576.9us 4.615ms
Modulation	0.3GMSK	0.3GMSK	0.3GMSK	0.3GMSK
MS Power	33dBm~5dBm	33dBm~5dBm	30dBm~0dBm	30dBm~0dBm
Power Class	5pcl ~ 19pcl	5pcl ~ 19pcl	0pcl ~ 15pcl	0pcl ~ 15pcl
Sensitivity	-102dBm	-102dBm	-100dBm	-100dBm
TDMA Mux	8	8	8	8
Cell Radius	35Km	35Km	2Km	-

SAMSUNG Proprietary-Contents may change without notice
This Document can not be used without Samsung's authorization

2-2. GSM TX power class

TX Power control level	GSM900
5	33±2 dBm
6	31±3 dBm
7	29±3 dBm
8	27±3 dBm
9	25±3 dBm
10	23±3 dBm
11	21±3 dBm
12	19±3 dBm
13	17±3 dBm
14	15±3 dBm
15	13±3 dBm
16	11±5 dBm
17	9±5 dBm
18	7±5 dBm
19	5±5 dBm

TX Power control level	DCS1800
0	30±2 dBm
1	28±3 dBm
2	26±3 dBm
3	24±3 dBm
4	22±3 dBm
5	20±3 dBm
6	18±3 dBm
7	16±3 dBm
8	14±3 dBm
9	12±4 dBm
10	10±4 dBm
11	8±4dBm
12	6±4 dBm
13	4±4 dBm
14	2±5 dBm
15	0±5 dBm

TX Power control level	PCS1900
0	30±2 dBm
1	28±3 dBm
2	26±3 dBm
3	24±3 dBm
4	22±3 dBm
5	20±3 dBm
6	18±3 dBm
7	16±3 dBm
8	14±3 dBm
9	12±4 dBm
10	10±4 dBm
11	8±4dBm
12	6±4 dBm
13	4±4 dBm
14	2±5 dBm
15	0±5 dBm

SAMSUNG Proprietary-Contents may change without notice
This Document can not be used without Samsung's authorization

2-3. GSM EDGE TX power class

TX Power control level	GSM900
8	27±3 dBm
9	25±3 dBm
10	23±3 dBm
11	21±3 dBm
12	19±3 dBm
13	17±3 dBm
14	15±3 dBm
15	13±3 dBm
16	11±5 dBm
17	9±5 dBm
18	7±5 dBm
19	5±5 dBm

TX Power control level	DCS1800
2	26 -4/+3 dBm
3	24±3 dBm
4	22±3 dBm
5	20±3 dBm
6	18±3 dBm
7	16±3 dBm
8	12±3 dBm
9	10±3 dBm
10	14±3 dBm
11	12±4 dBm
12	10±4 dBm
13	8±4dBm
14	6±4 dBm
15	4±4 dBm

TX Power control level	PCS1900
2	26 -4/+3 dBm
3	24±3 dBm
4	22±3 dBm
5	20±3 dBm
6	18±3 dBm
7	16±3 dBm
8	12±3 dBm
9	10±3 dBm
10	14±3 dBm
11	12±4 dBm
12	10±4 dBm
13	8±4dBm
14	6±4 dBm
15	4±4 dBm

SAMSUNG Proprietary-Contents may change without notice
This Document can not be used without Samsung's authorization

SAMSUNG Proprietary-Contents may change without notice
This Document can not be used without Samsung's authorization

5. Exploded View and Parts List

5-1. Cellular phone Exploded View

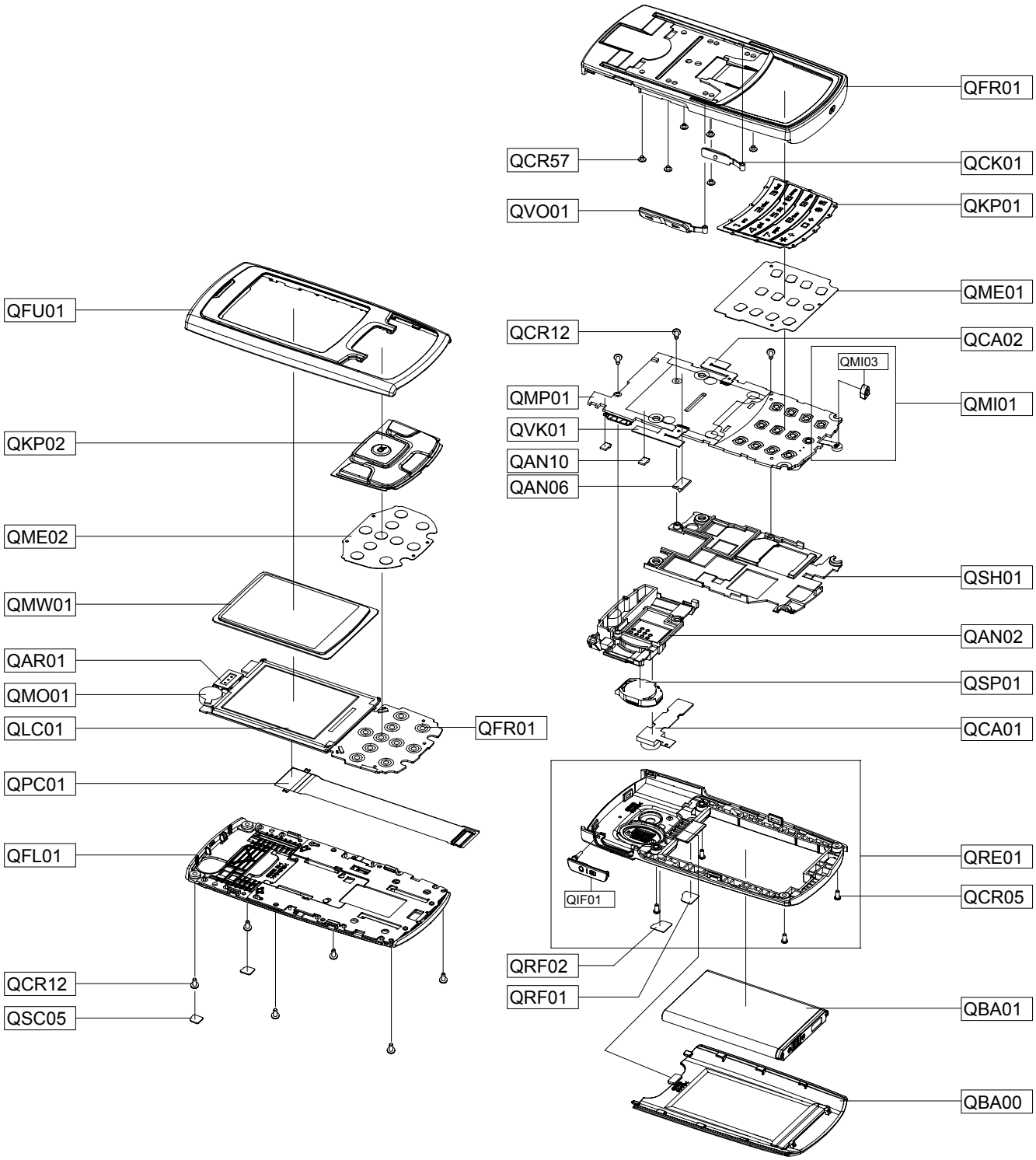

SAMSUNG Proprietary-Contents may change without notice
This Document can not be used without Samsung's authorization

5-2. Cellular phone Parts List

Design LOC		Description	SEC CODE
QAN02		INTENNA-SGH P260	GH42-01234A
QAN06		ASSY RUBBER-INTENNA CONTACT	GH98-04988A
QAN10		ASSY-CUSHION-ANTENNA CONTACT	GH98-00741A
QAR01		AUDIO-RECEIVER	3009-001275
QBA00		PMO COVER-BATTERY	GH72-39249B
QBA01		INNER BATTERY PACK-960MAH,BLK,	GH43-02720A
QCA01		CAMERA MODULE	GH59-04519A
QCA02		KEY FPCB-CAMERA KEY	GH59-04539A
QCK01		PMO KEY-CAMERA	GH72-39252B
QCR05		SCREW-MACHINE	6001-001478
QCR12		SCREW-MACHINE	6001-001530
QCR12		SCREW-MACHINE	6001-001530
QCR57		SCREW-MACHINE	6001-002001
QFL01		ASSY CASE-SLIDE LOWER(ORG)	GH98-04471B
QFR01		ASSY CASE-FRONT	GH98-04469B
QFU01		ASSY CASE-SLIDE UPPER	GH98-04404A
QKP01		ASSY KEYPAD-MAIN(ORG/BLU)	GH98-04472B
QKP02		ASSY KEYPAD-SUB(ORG/BLU)	GH98-05171B
QLC01		ELA ETC-LCD MODULE	GH96-02815A
QME01		DOME SHEET-MAIN METAL DOME	GH59-04514A
QME02		DOME SHEET-SUB METAL DOME	GH59-04515A
QMO01		MOTOR DC-SGH P260	GH31-00336A
QMP01		PBA MAIN-SGH P260	GH92-03717B
QMW01		ASSY COVER-WINDOW MAIN	GH98-06086A
QPC01		MEA-FPCBKIT	GH97-08023A
QRF01		TAPE-RF COVER L	GH74-34298B
QRF02		TAPE-RF COVER R	GH74-34299B
QSC05		TAPE-SCREW CAP	GH74-32676A
QSH01		ASSY BRACKET-SHIELD CAN	GH98-05985B
QSP01		SPEAKER	3001-002201
QVK01		KEY FPCB-VOLUME KEY	GH59-04538A
QVO01		PMO KEY-VOLUME	GH72-39251B
QMI01		MICROPHONE-ASSY	GH30-00389A
	QMI03	AS-SGHP260 MIC RUBBER	GH81-06831A
QRE01		ASSY CASE-REAR	GH98-04470B
	QIF01	PMO COVER-IF	GH72-39250B

SAMSUNG Proprietary-Contents may change without notice
This Document can not be used without Samsung's authorization

Description	SEC CODE
BAG PE	6902-000634
CBF INTERFACE-DATA LINK CABLE(	GH39-00859B
ADAPTOR-ATADS10EBE,BLK,EU	GH44-01702A
S/W CD-PC STUDIO	GH46-00511A
EARPHONE	GH59-04556A
LABEL(P)-UNIT SEAL	GH68-00518B
LABEL(R)-PALLET FTM	GH68-08573V
LABEL(R)-WATER SOAK	GH68-09361A
LABEL(P)-FTM MP3SLIM	GH68-11246B
LABEL(R)-LIVE_UNIT BOX	GH68-12987A
LABEL(R)-MAIN(FRAN)	GH68-15571C
MANUAL USERS-FTM FRENCH	GH68-15797A
MANUAL USERS-QSG FTM FRENCH	GH68-15798A
MANUAL USERS-LEAFLETFRENCH	GH68-16069A
BOX-UNIT(ORANGE)	GH69-05605A
CUSHION-CASE(EU)	GH69-05723A
RMO RUBBER-LCD WINDOW	GH73-10670A
MPR-REMOVE TAPE LCD	GH74-13804A
MPR-VINYL BOHO MAIN	GH74-22190A
MPR-INSU TAPE	GH74-27511A
MPR-INSU TAPE	GH74-27512A
MPR-INSU TAPE	GH74-31953A
TAPE INSU-SUB	GH74-32669A
TAPE-FPCB	GH74-33712A
TAPE-SUB LED SHIELD L	GH74-34265A
TAPE-SUB LED SHIELD R	GH74-34266A
TAPE-MAIN LED SHIELD	GH74-34267A
VINYL-BOHO SLIDE UPPER A	GH74-35120A
VINYL-BOHO SLIDE UPPER B	GH74-35121A

SAMSUNG Proprietary-Contents may change without notice
This Document can not be used without Samsung's authorization

SAMSUNG Proprietary-Contents may change without notice
This Document can not be used without Samsung's authorization

11. Disassembly and Assembly Instructions

11-1. Disassembly Instructions

1 	2 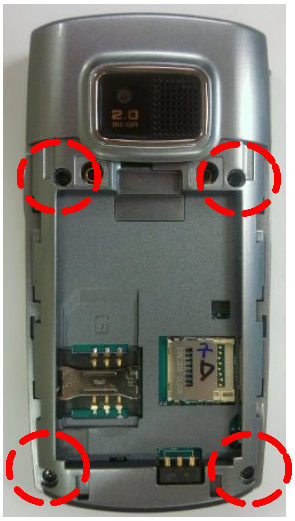 1) Unscrew 4 screws.
1) Remove battery and SIM card.	1) Be careful not to scratch molding.
3 1)Lift up the REAR CASE and separate it from the FRONT.	4 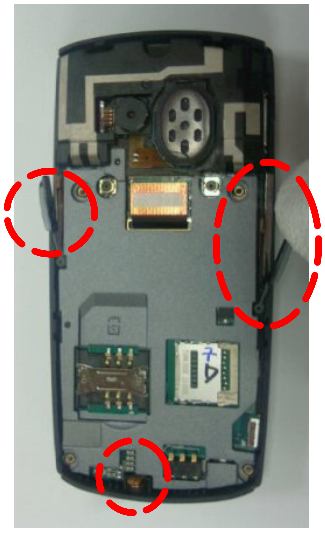 1) Remove the SIDE KEY(Camera KEY, Volume KEY) 2) Remove the MIC' Ass'y
1) Be careful not to damage LOCKER.	

SAMSUNG Proprietary-Contents may change without notice
This Document can not be used without Samsung's authorization

5

1) Remove the MAIN PBA

6

1) Remove the KEYPAD from the ass'y.

1) Be careful not to damage the components around LCD CONNECTOR.

7

1) Unscrew 6 screws from the FRONT.

8

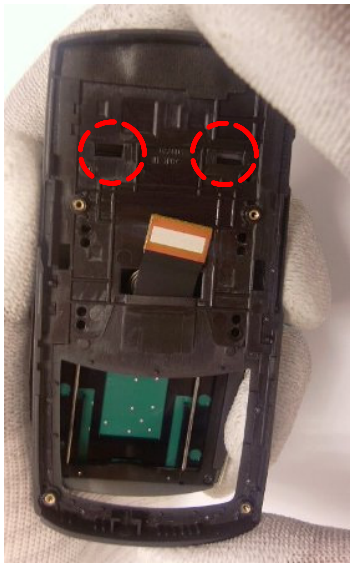

1) Remove the FRONT from the ass'y.

SAMSUNG Proprietary-Contents may change without notice
This Document can not be used without Samsung's authorization

9

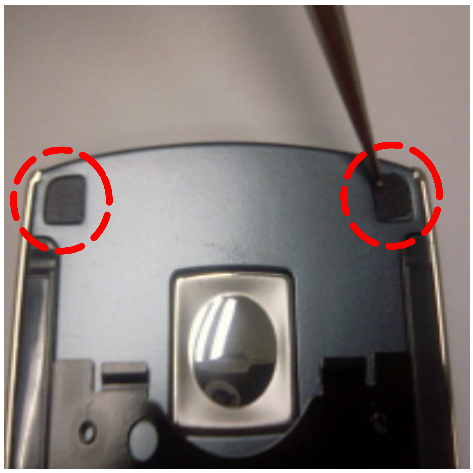

1) Remove the screw covers with tweezers.

1) Be careful not to damage the LOWER when remove the covers

10

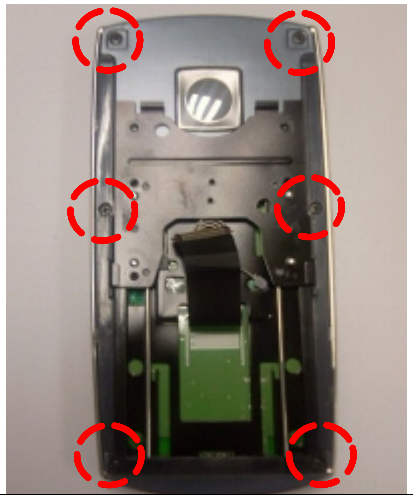

1) Unscrew 6 screws from the LOWER.

1) Be careful not to damage the LOWER molding and the Hinge.

11

1) Separate the LOWER from the Folder Assy'. (Open the locker between the SLIDE UPPER and the SLIDE LOWER.)

1) Be careful not to damage the LCD FPCB.
2) Be careful not to scratch molding.

12

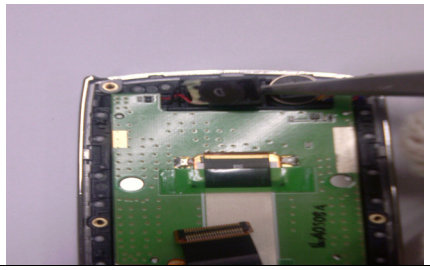

1) Using tweezers, separate the RECEIVER from the SLIDE UPPER.

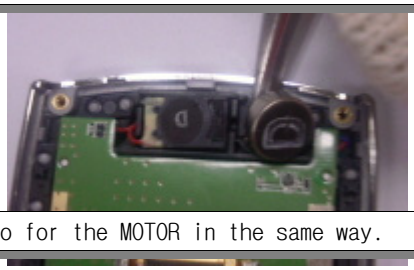

2) Do for the MOTOR in the same way.

1) Be careful not to scratch molding.

SAMSUNG Proprietary-Contents may change without notice
This Document can not be used without Samsung's authorization

13 1) Remove the keypad from the Ass'y with tweezers.	14 1) Bend the SLIDE UPPER slightly and separate the LCD from the UPPER.
1) Be careful not to damage the SUB PBA.	1) Be careful not to damage LCD.
15 1) Completed.	
1) Be careful not to leave any foreign substance or fingerprint on the LCD.	

SAMSUNG Proprietary-Contents may change without notice
This Document can not be used without Samsung's authorization

11-2. Assembly Instructions

1 1) LCD Ass'y	2 1) Insert the KEYPAD into the hole on the UPPER carefully
1) Be careful not to leave any foreign substance or fingerprint on the LCD.	1) Be careful not to fold the keypad.
3 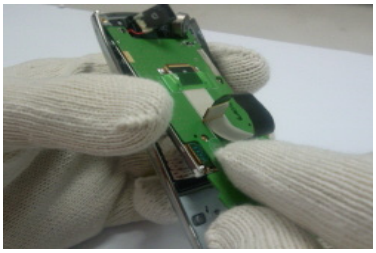 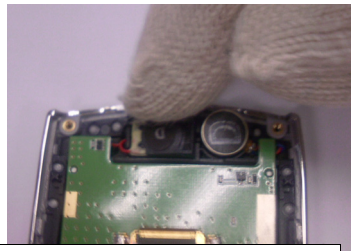 1) Put the SUB PBA Ass'y into place as shown. 2) Put the receiver and motor into place.	4 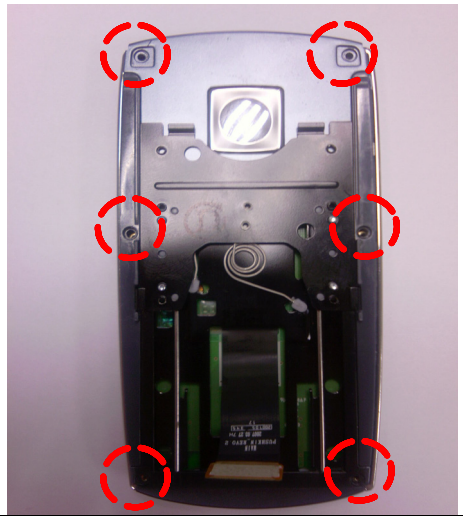 1) As shown, put the LOWER and press it. 2) Tighten 6 screws.
1) Remove a tape on UPPER before putting the SUB PBA. 2) Be careful not to break wires.	1) Press the LOWER until it clicks.

SAMSUNG Proprietary-Contents may change without notice
This Document can not be used without Samsung's authorization

5

1) Put the SCREW CAP.
2) As shown, put the FRONT and pull it down.

1) Be careful not to damage SCREW CAP and LOWER.
2) Pull down FRONT until it hang on hook.

6

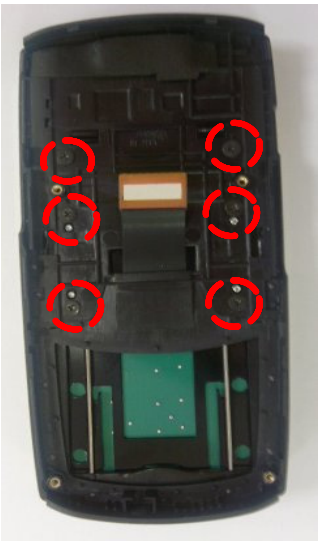

1) Tighten 6 screws.

1) Be careful not to make scratch and damage.

7

1) Put up KEYPAD.

1) Be careful not to fold the keypad.

8

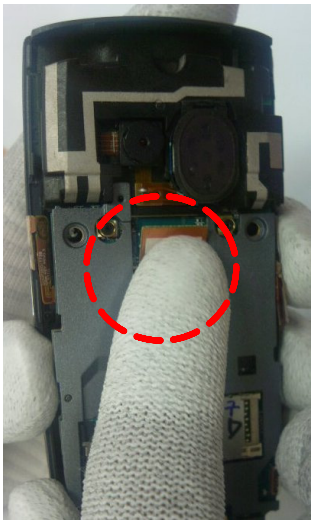

1) As shown, put the connector until it clicks

1) Press the connector until it clicks.

SAMSUNG Proprietary-Contents may change without notice
This Document can not be used without Samsung's authorization

9

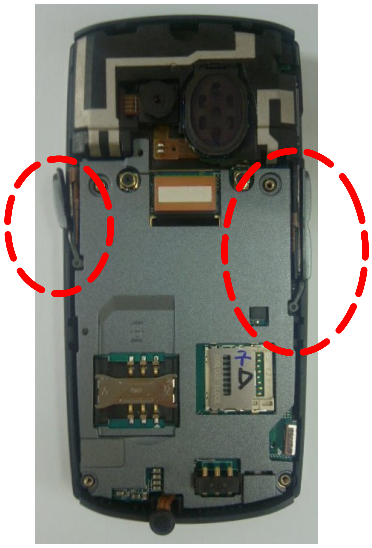

1) As you shown, assemble the SIDE KEY.

1) Hang SIDE KEY on hook.
2) Be careful not to damage the SIDE KEY FPCB.

10

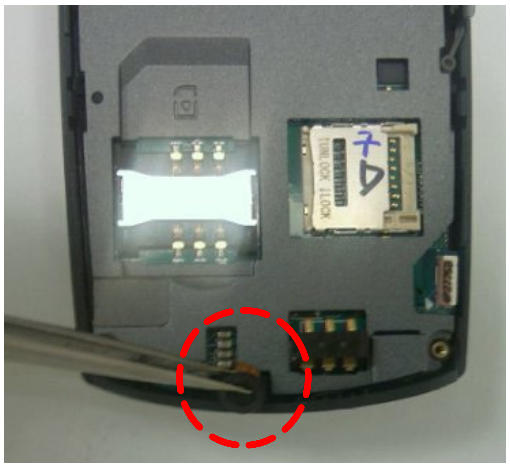

1) As shown, push the MIC into the hole with tweezers.

1) Be careful not to damage the MIC and FPCB.

11

1) As shown,put the REAR and press it.

1) Press the REAR until it clicks.

12

1) Tighten 4 screws.

1) Be careful not to make any scratch and damage.

SAMSUNG Proprietary-Contents may change without notice
This Document can not be used without Samsung's authorization

11-3. LCD

1

1) See the aperture below between LCD MODULE and MAIN WINDOW in the picture.
2) Insert a thin tool into the aperture and slowly separate the main window from the LCD module.

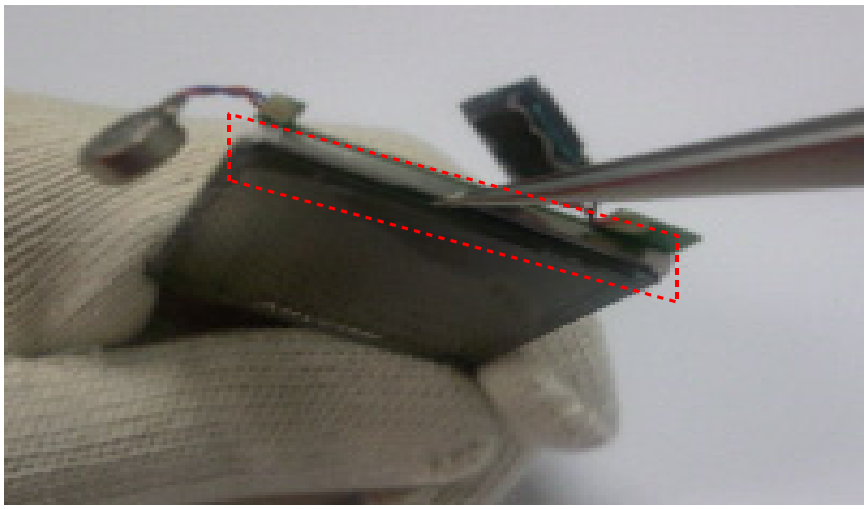

1) Do it slowly.
1) Be careful not to crack the main window.
2) Be careful not to leave any foreign substance or fingerprint on the window.

2

Be careful not to leave any foreign substance or fingerprint on the MAIN LCD.

1) Do it slowly.
1) Be careful not to crack the main window.
2) Be careful not to leave any foreign substance or fingerprint on the window.

SAMSUNG Proprietary-Contents may change without notice
This Document can not be used without Samsung's authorization

9. Flow Chart of Troubleshooting

9-1. Power On

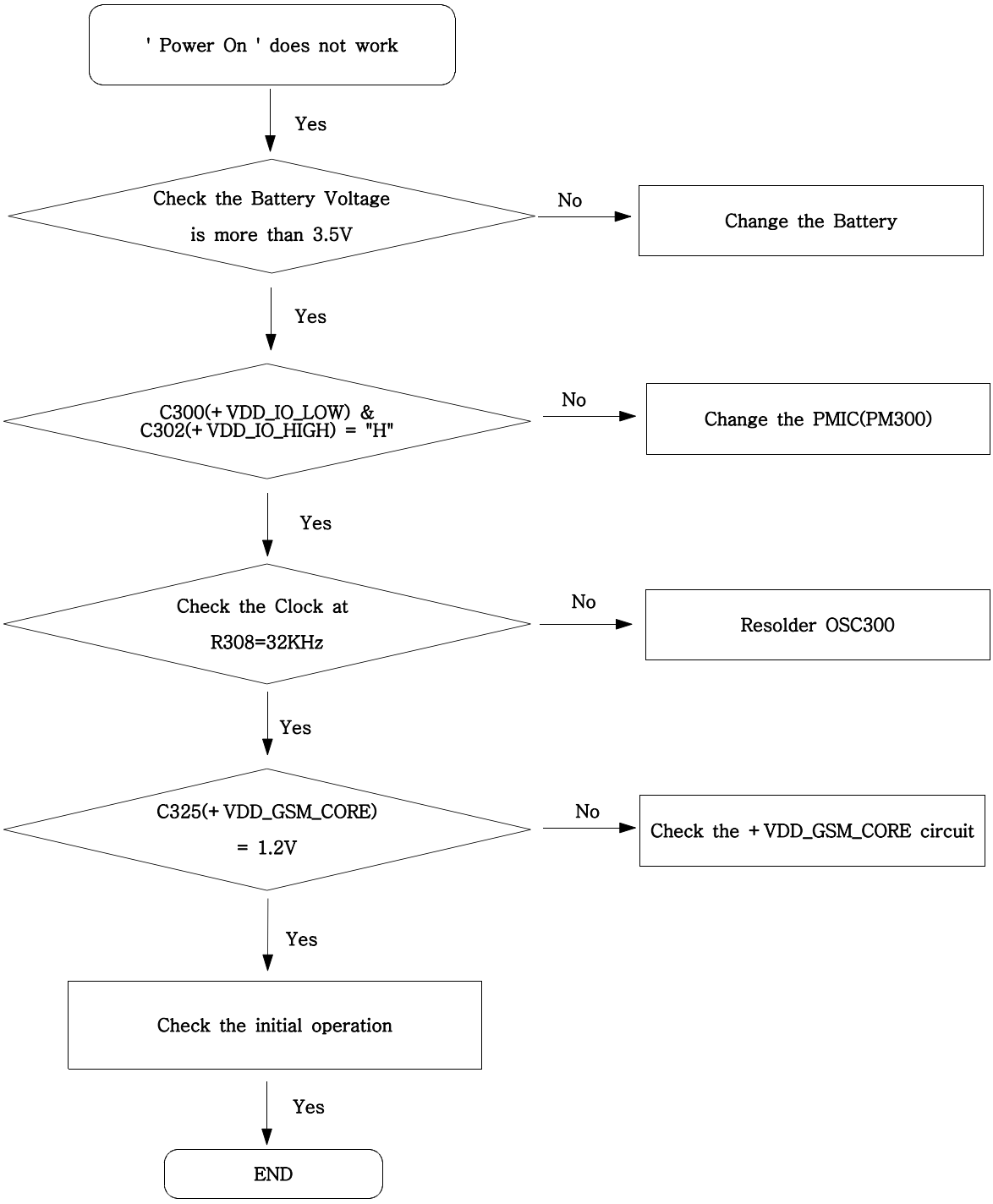

SAMSUNG Proprietary-Contents may change without notice
This Document can not be used without Samsung's authorization

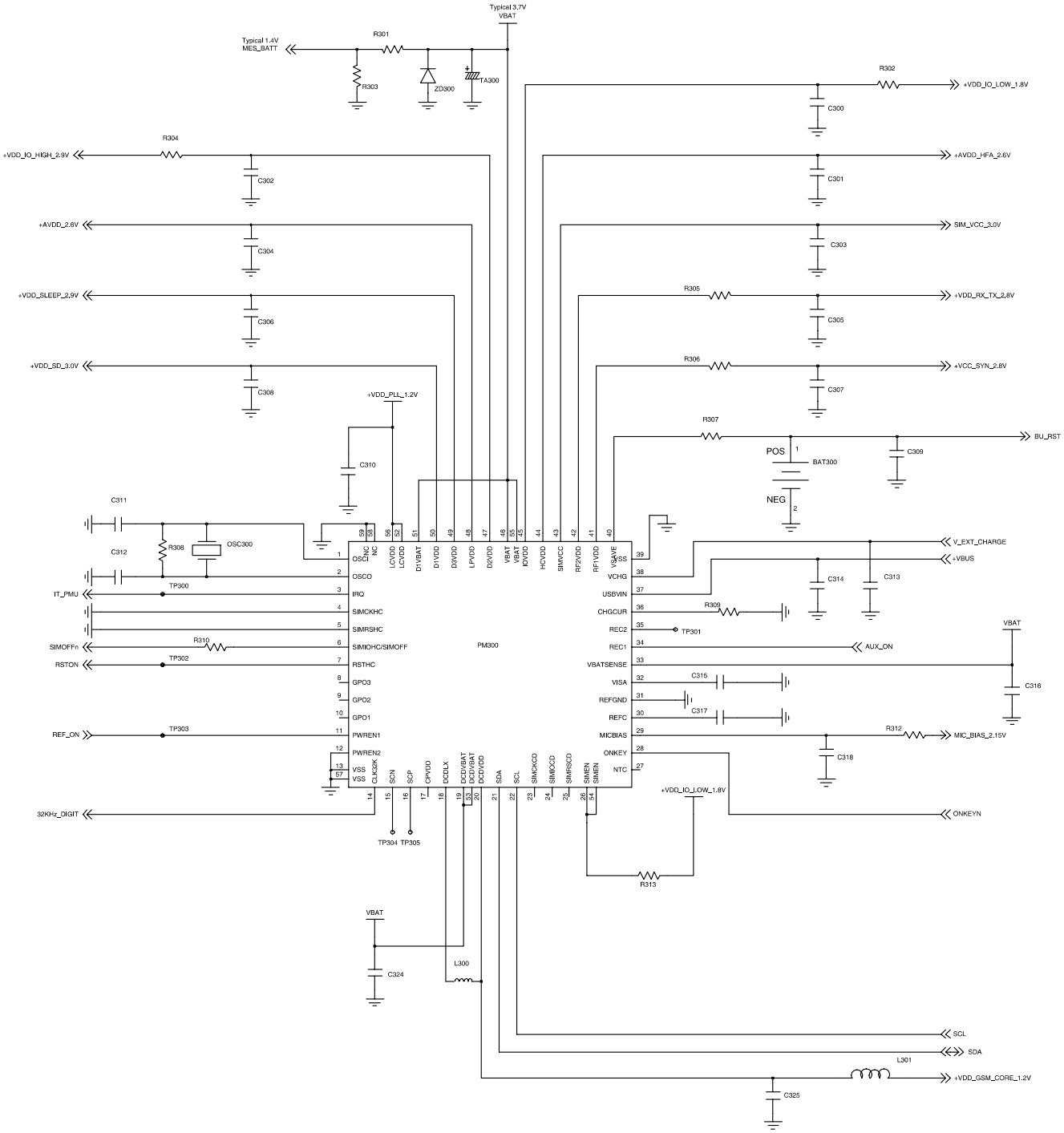

SAMSUNG Proprietary-Contents may change without notice
This Document can not be used without Samsung's authorization

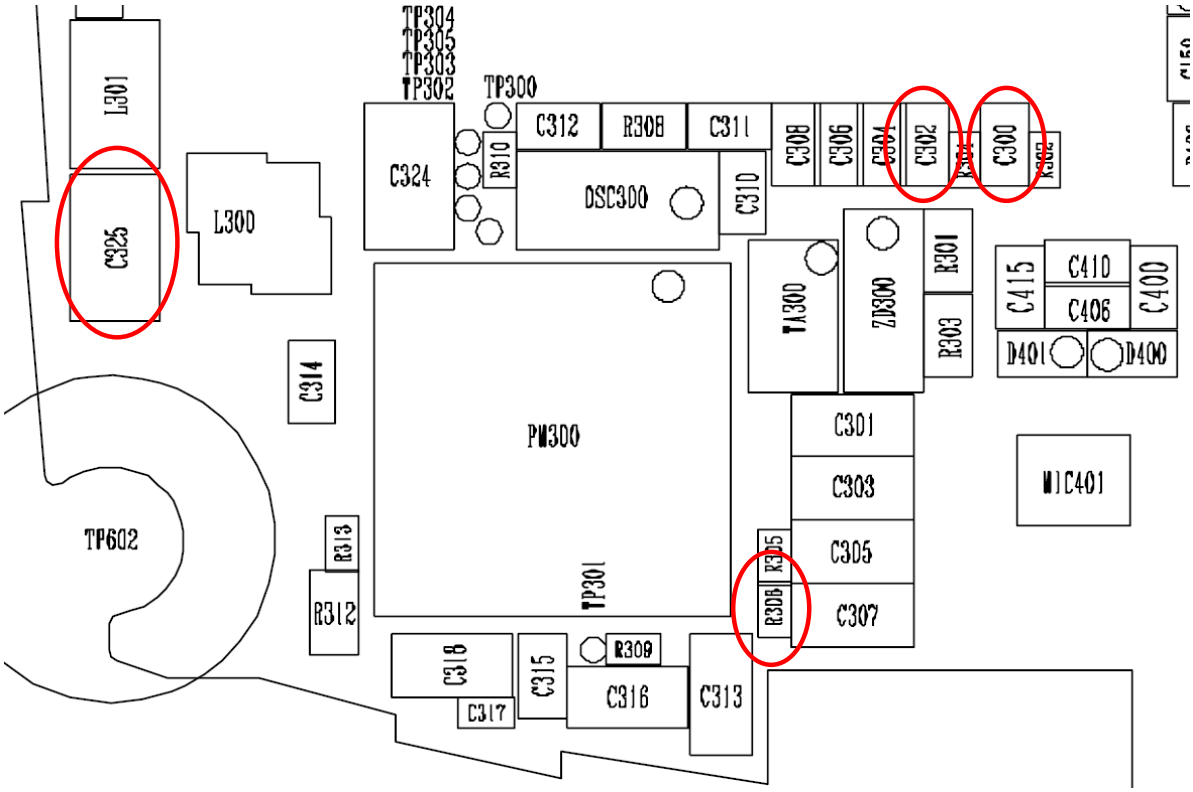

SAMSUNG Proprietary-Contents may change without notice
This Document can not be used without Samsung's authorization

9-2. Initial

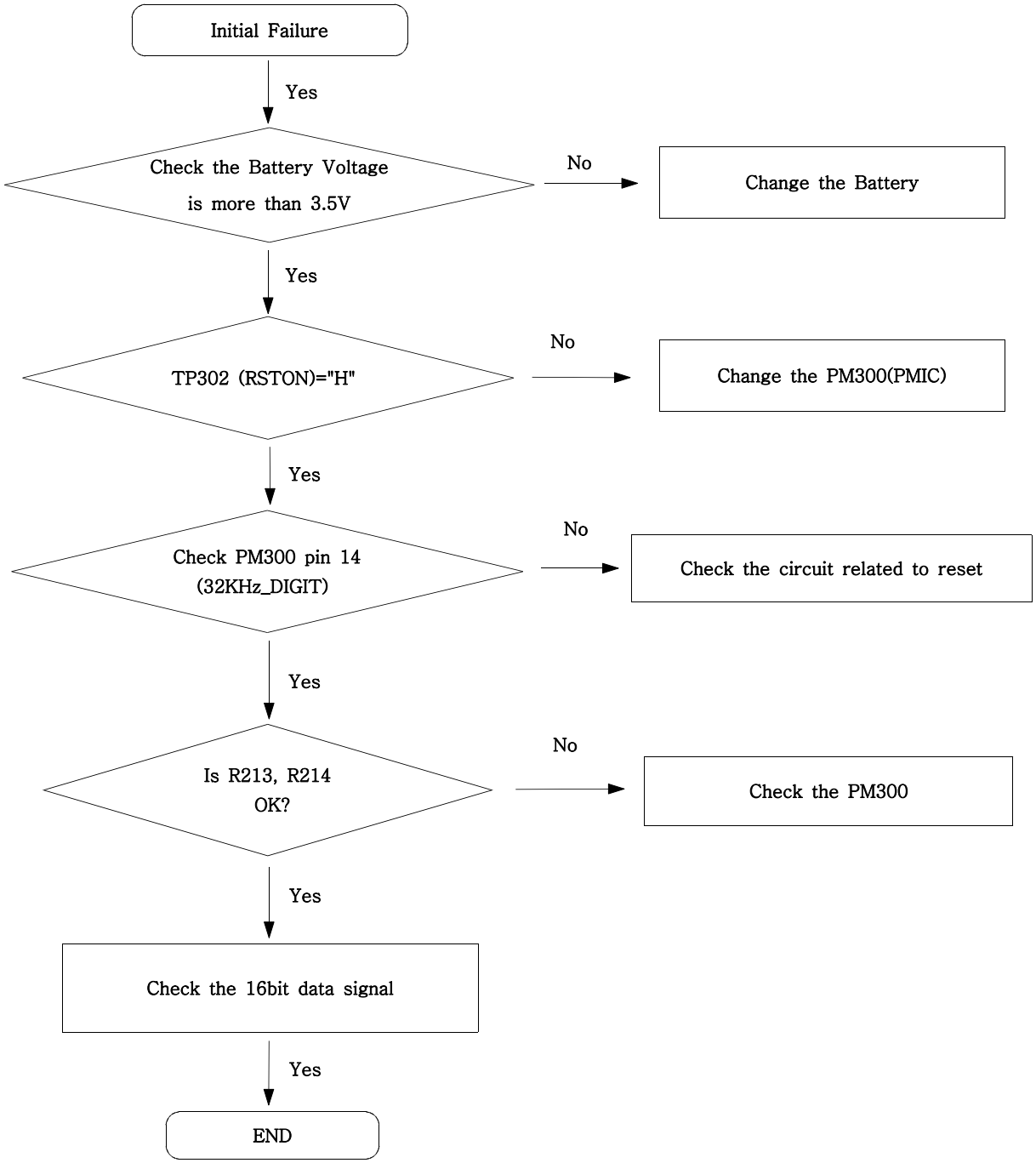

SAMSUNG Proprietary-Contents may change without notice
This Document can not be used without Samsung's authorization

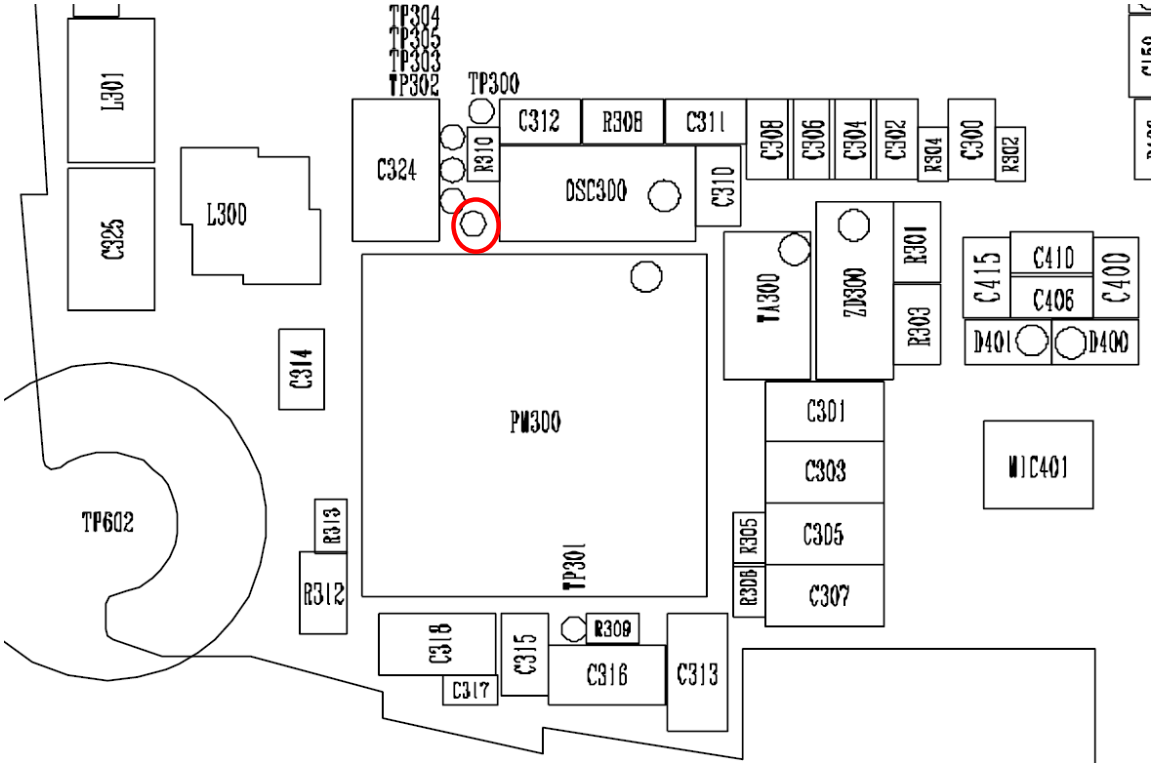

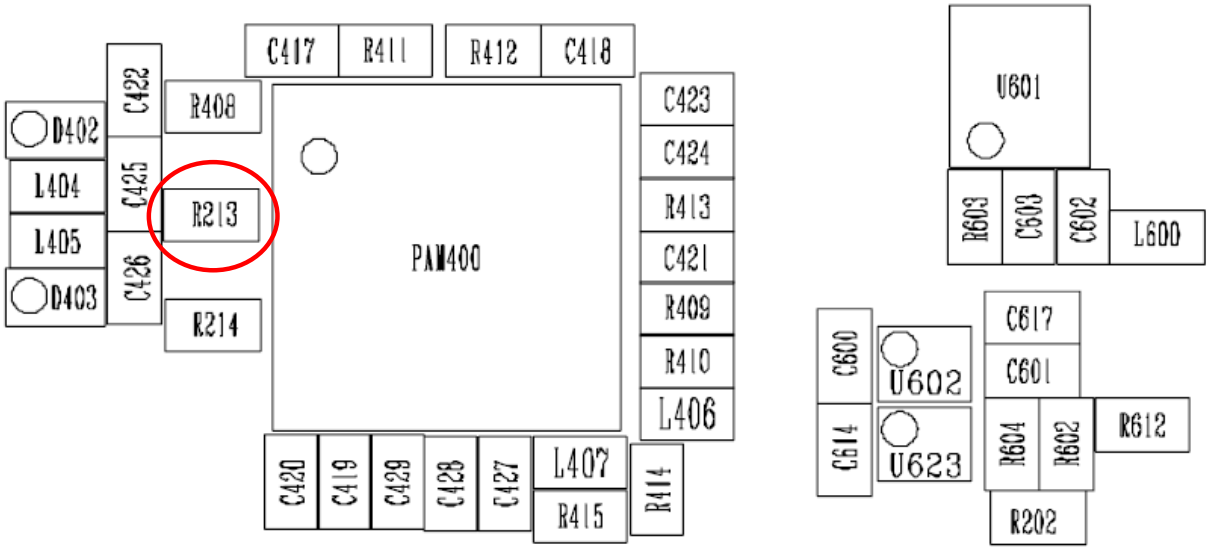

SAMSUNG Proprietary-Contents may change without notice
This Document can not be used without Samsung's authorization

9-3. Charging Part

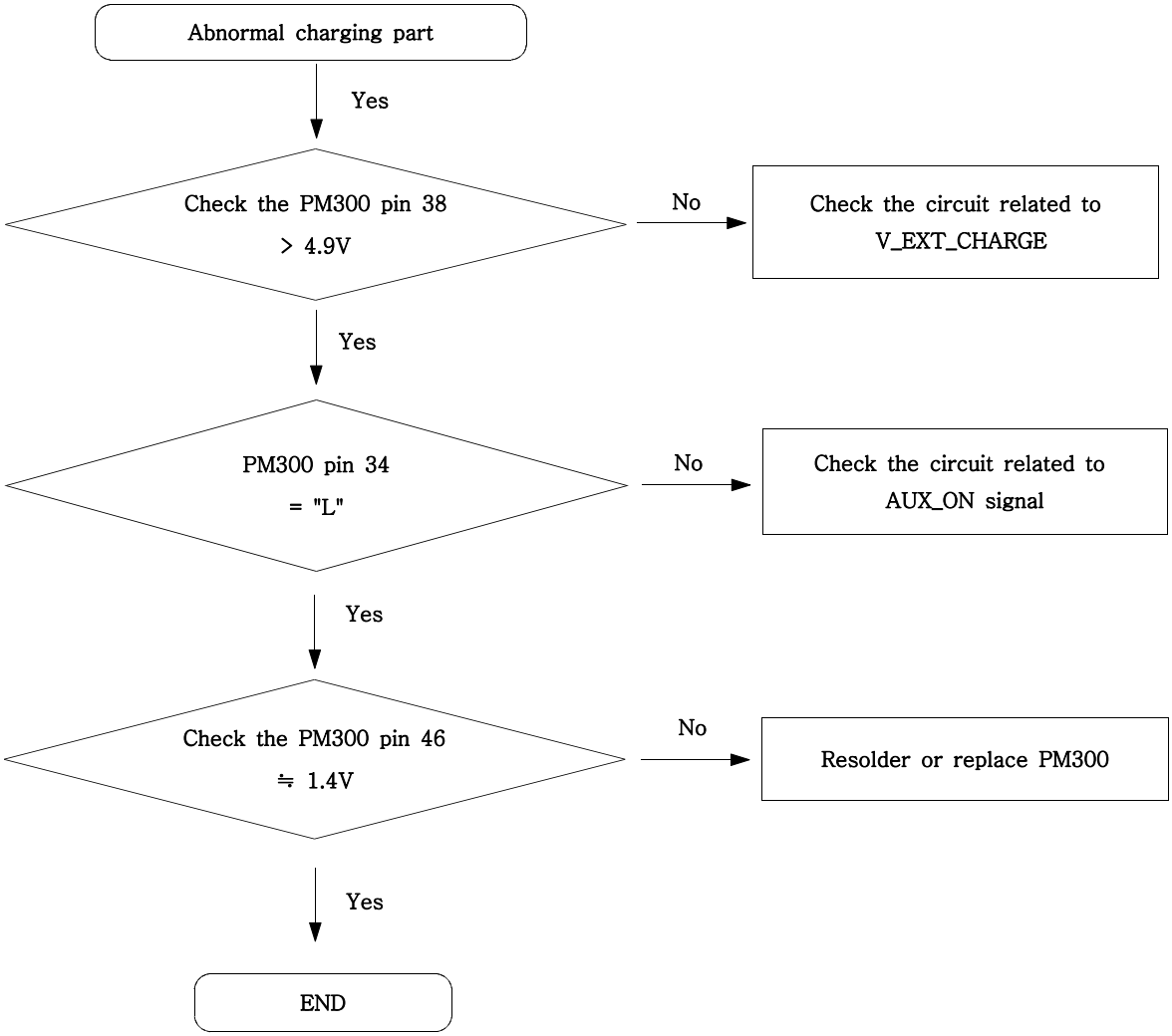

SAMSUNG Proprietary-Contents may change without notice
This Document can not be used without Samsung's authorization

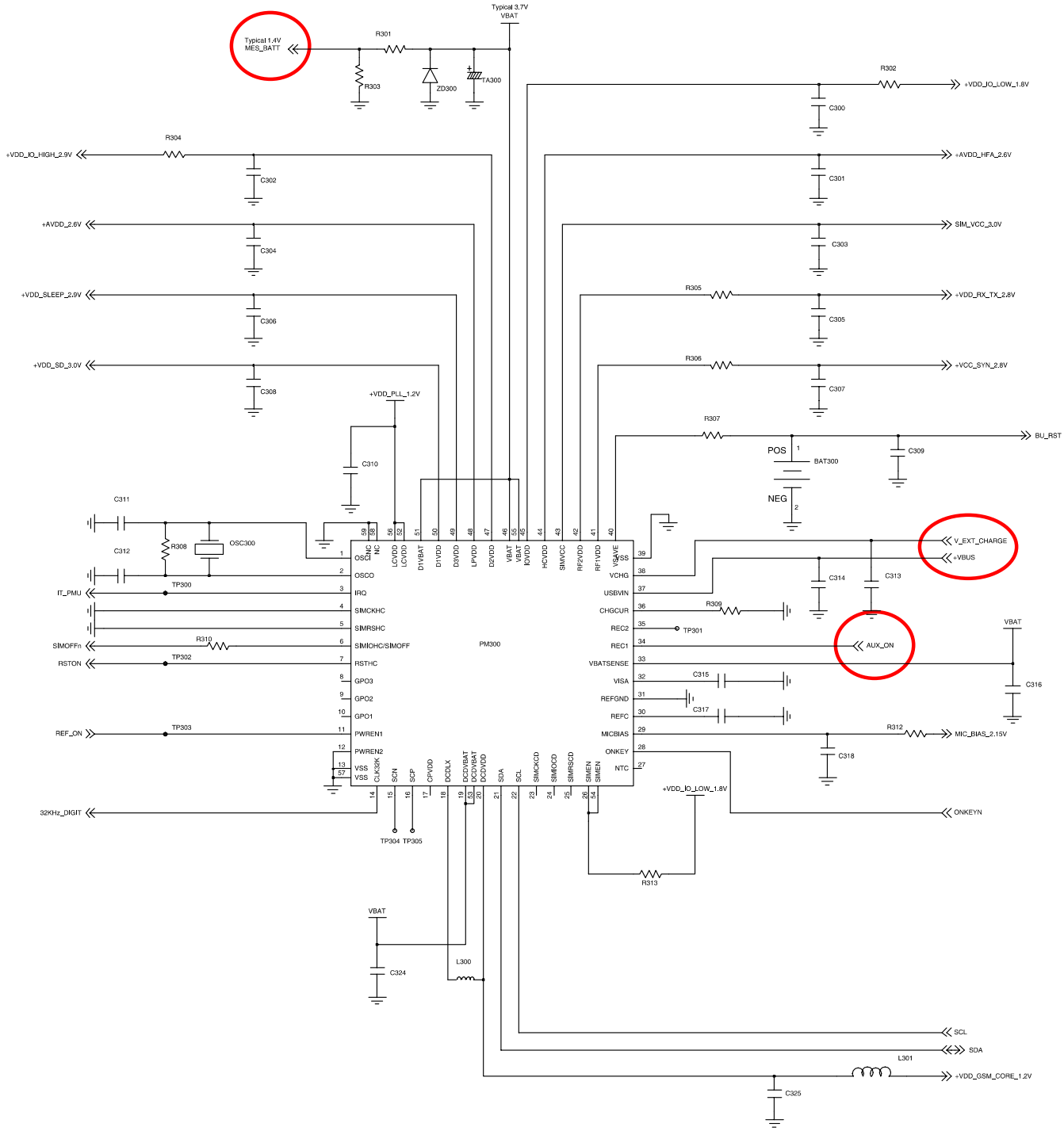

SAMSUNG Proprietary-Contents may change without notice
This Document can not be used without Samsung's authorization

9-4. Sim Part

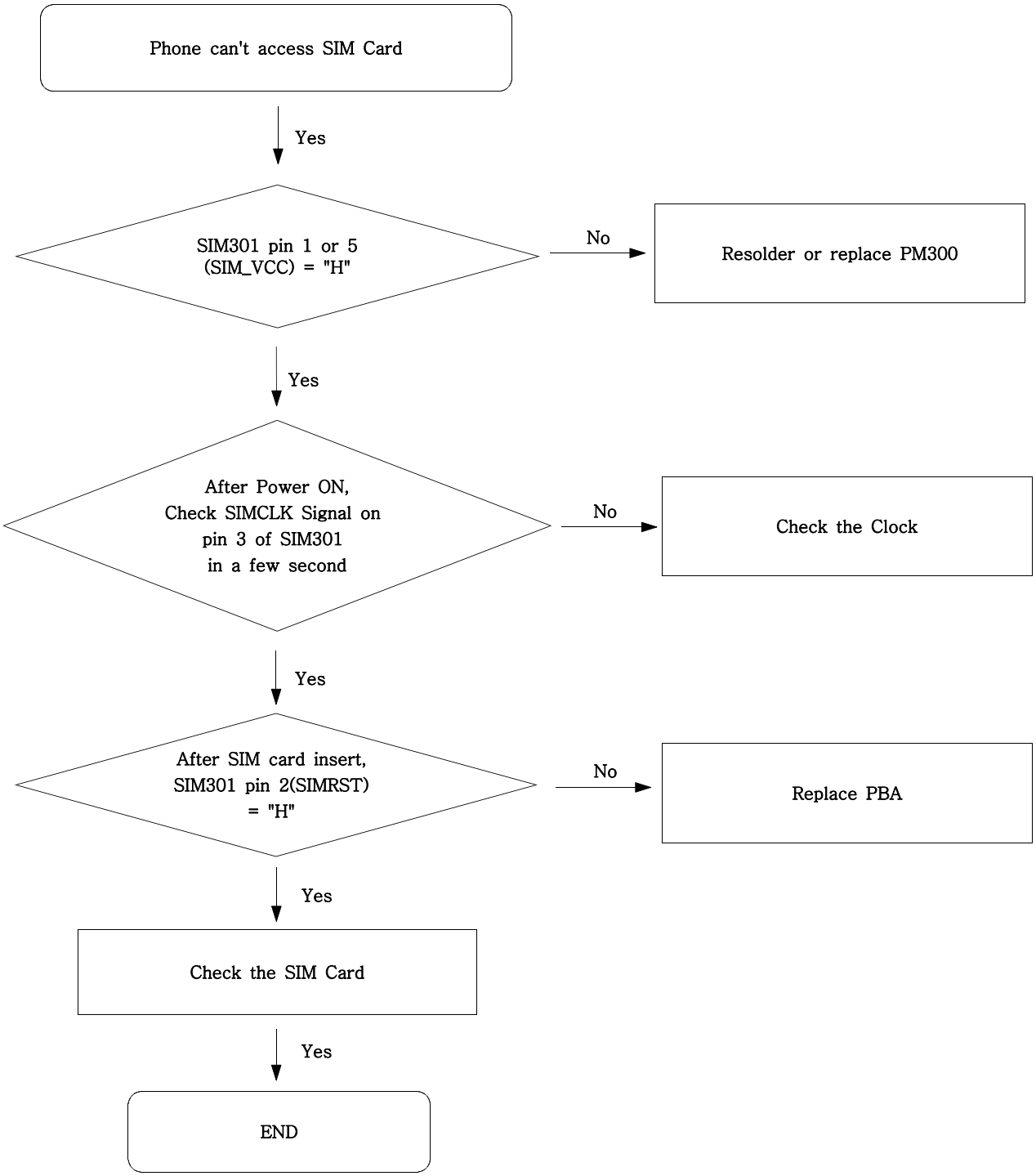

SAMSUNG Proprietary-Contents may change without notice
This Document can not be used without Samsung's authorization

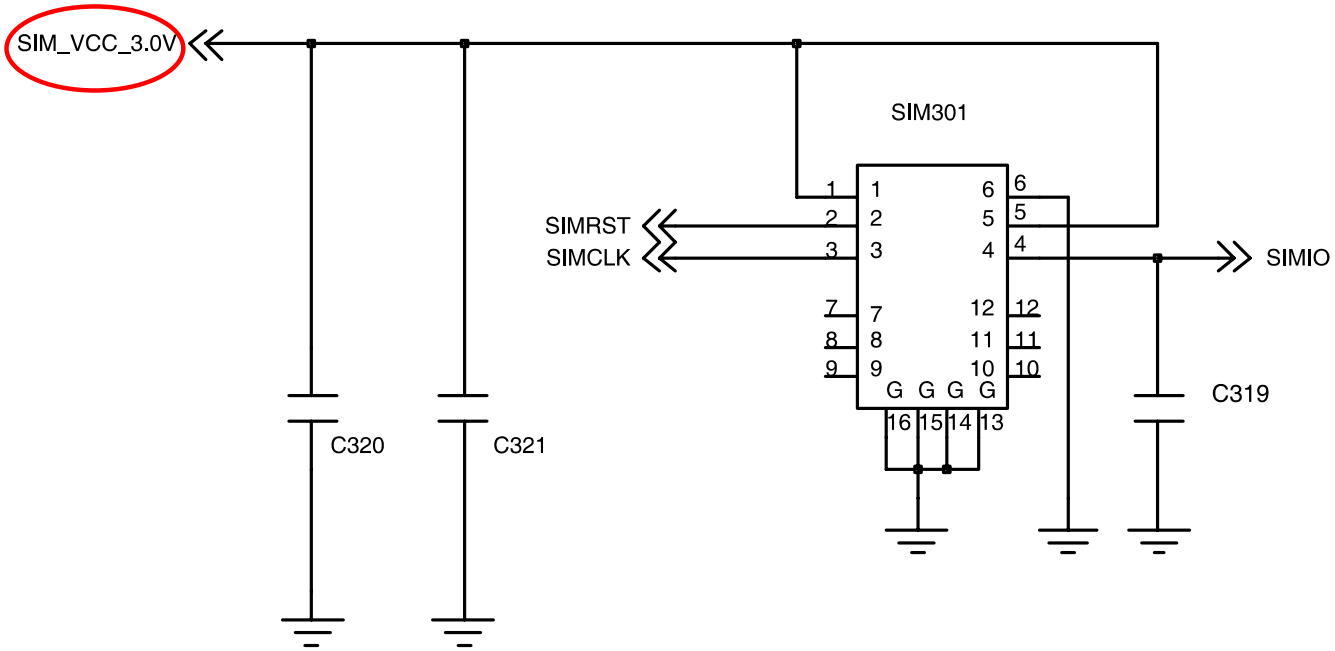

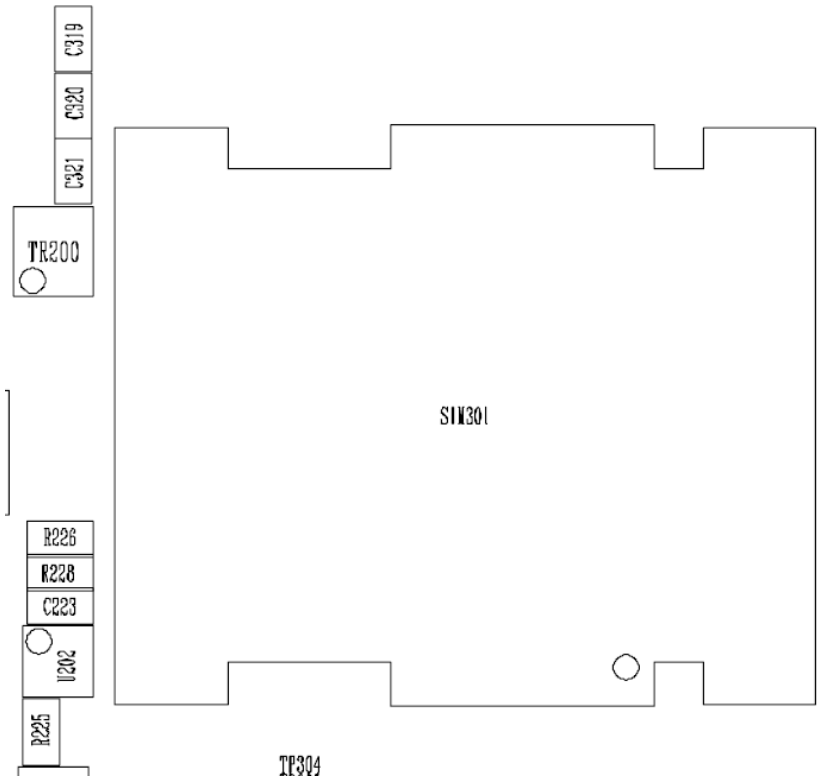

SAMSUNG Proprietary-Contents may change without notice
This Document can not be used without Samsung's authorization

9-5. Microphone Part

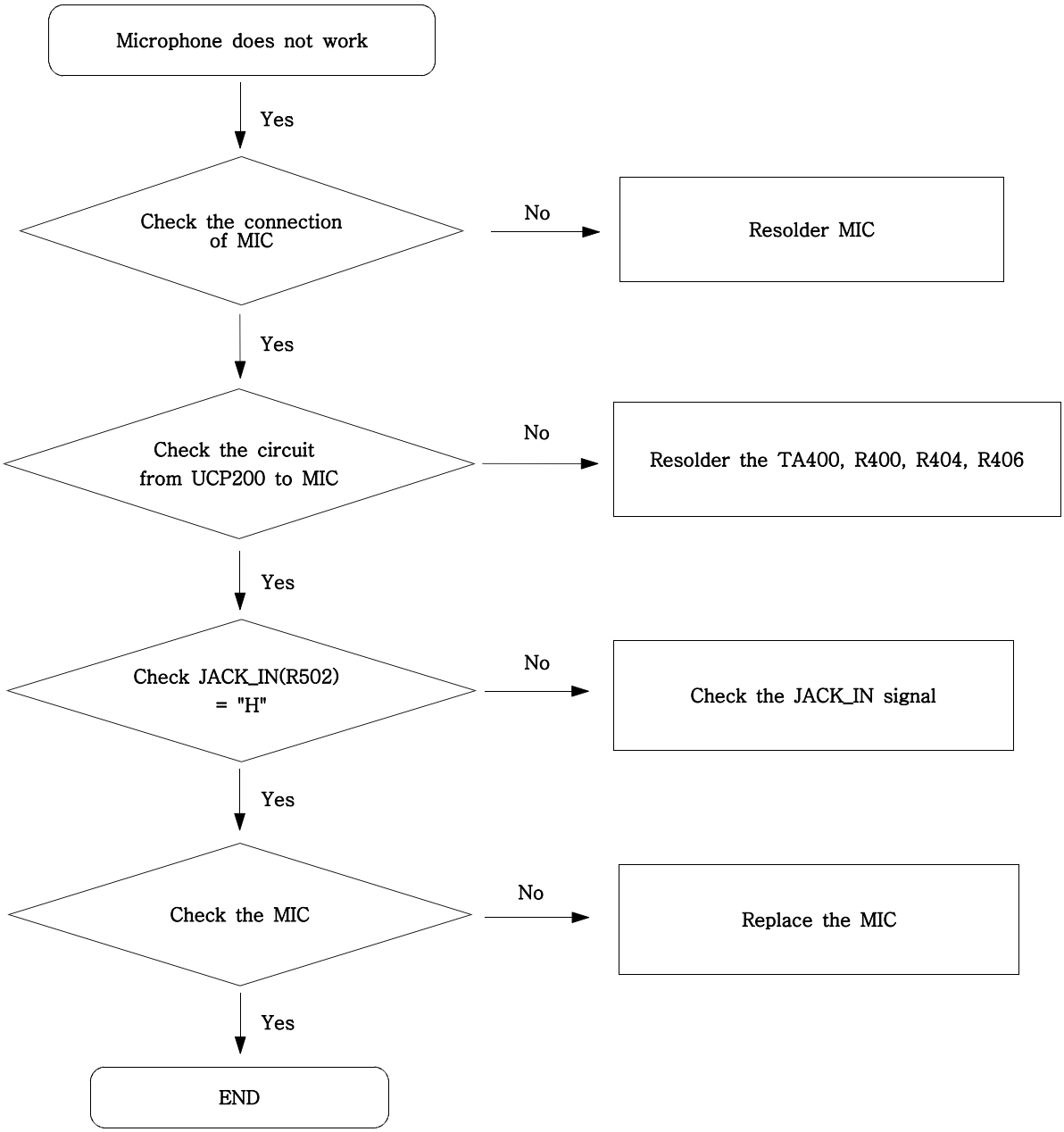

SAMSUNG Proprietary-Contents may change without notice
This Document can not be used without Samsung's authorization

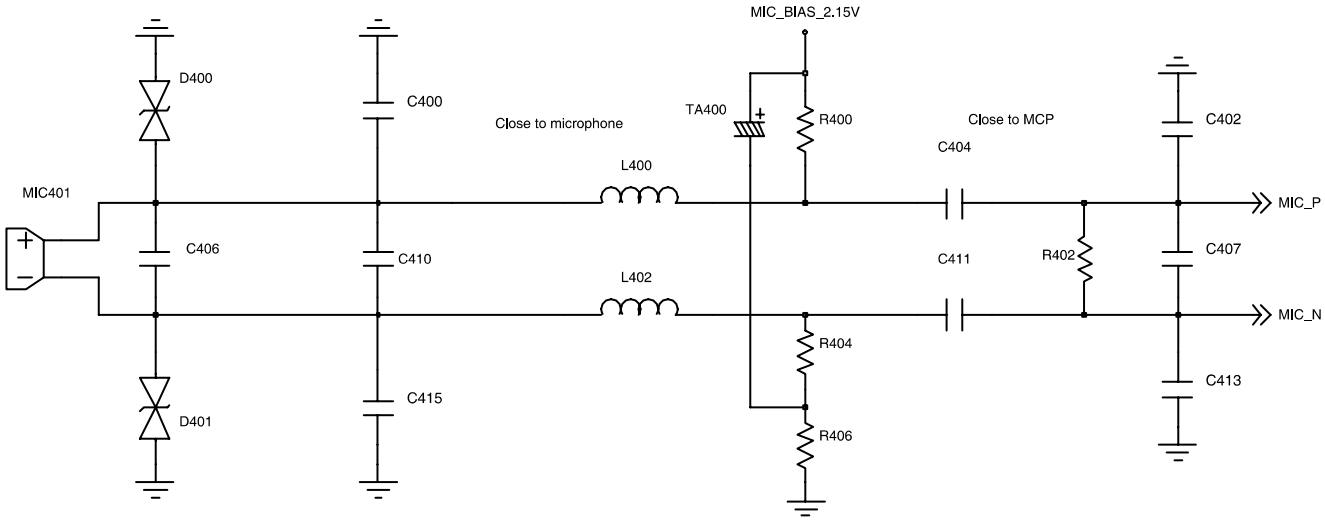

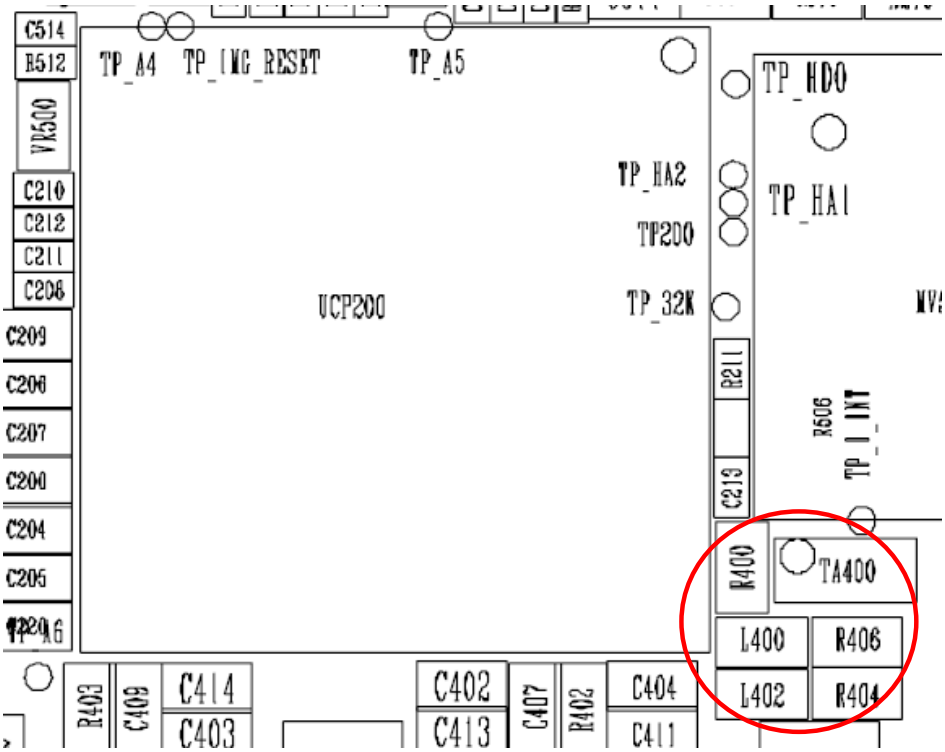

SAMSUNG Proprietary-Contents may change without notice
This Document can not be used without Samsung's authorization

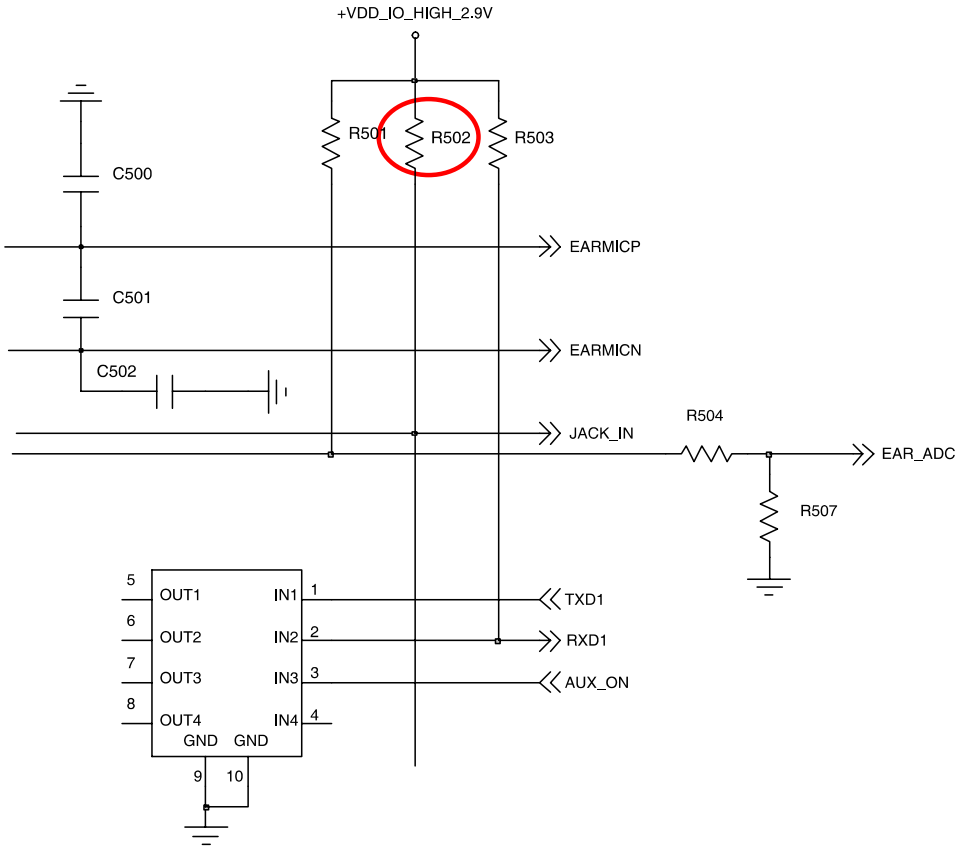

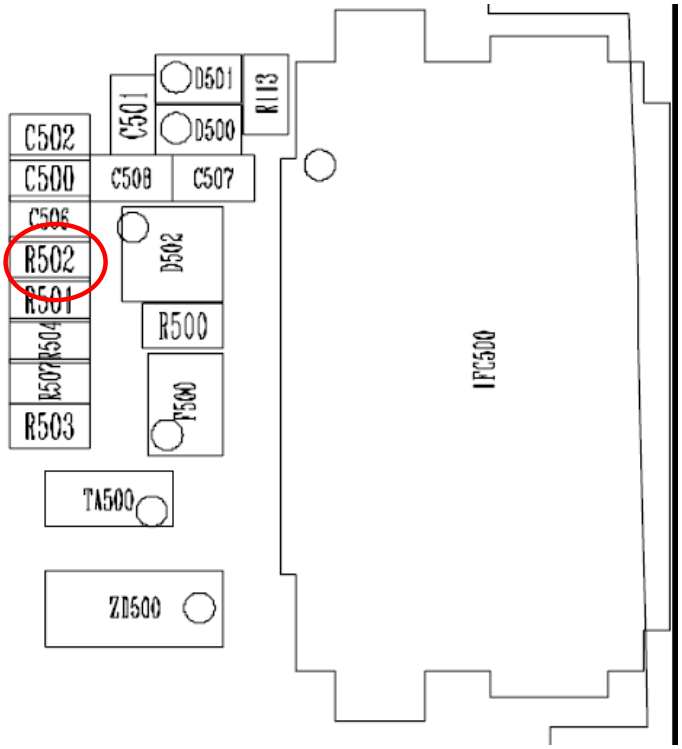

SAMSUNG Proprietary-Contents may change without notice
This Document can not be used without Samsung's authorization

9-6. Speaker Part(Melody)

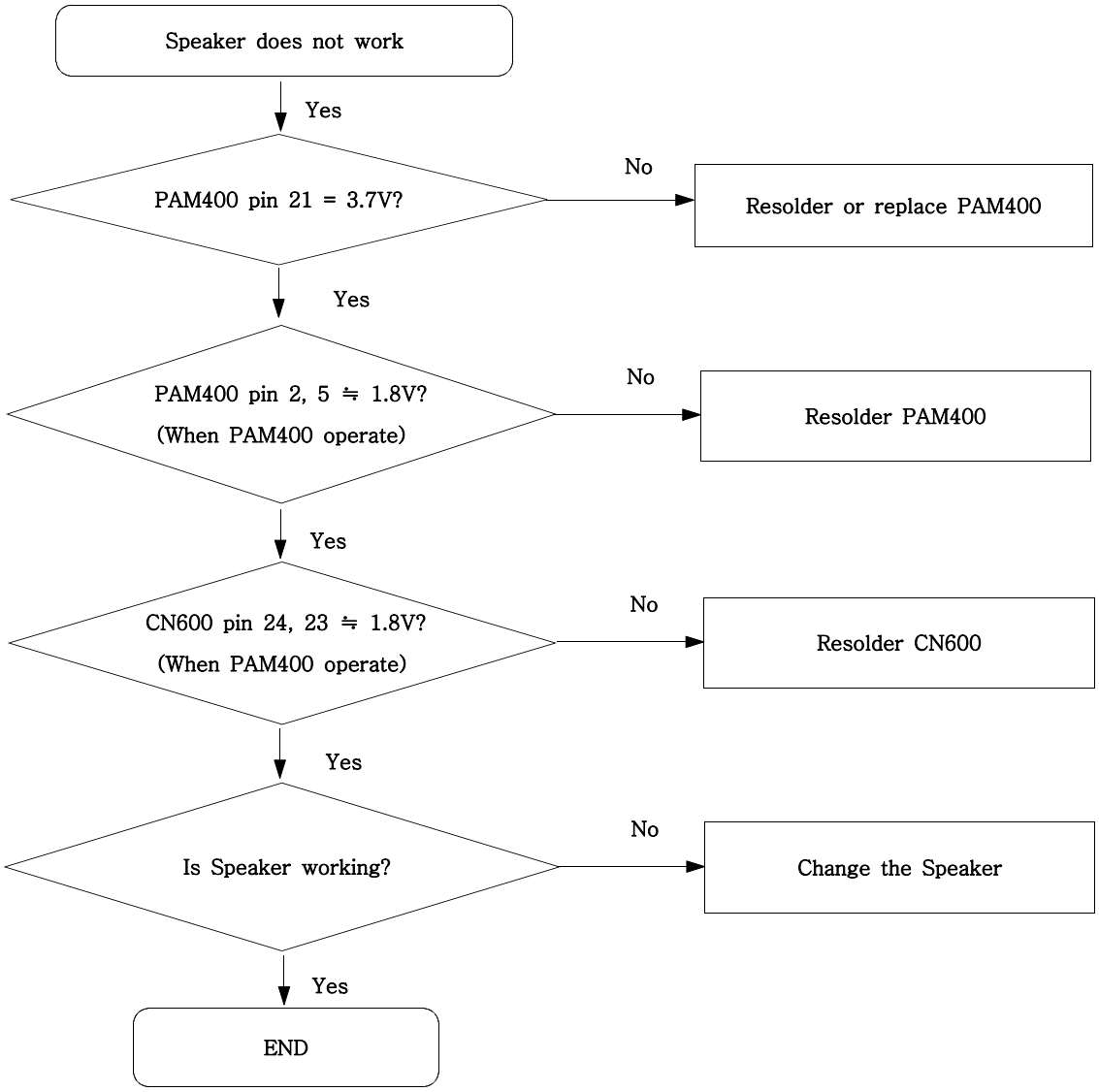

SAMSUNG Proprietary-Contents may change without notice
This Document can not be used without Samsung's authorization

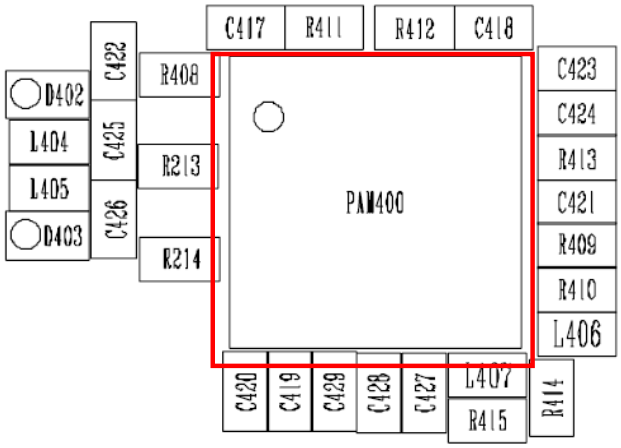

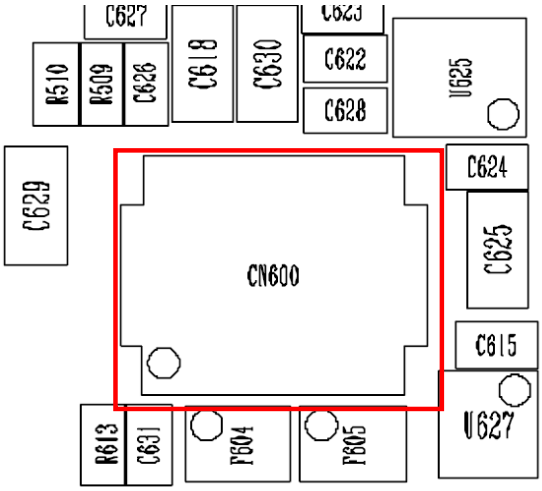

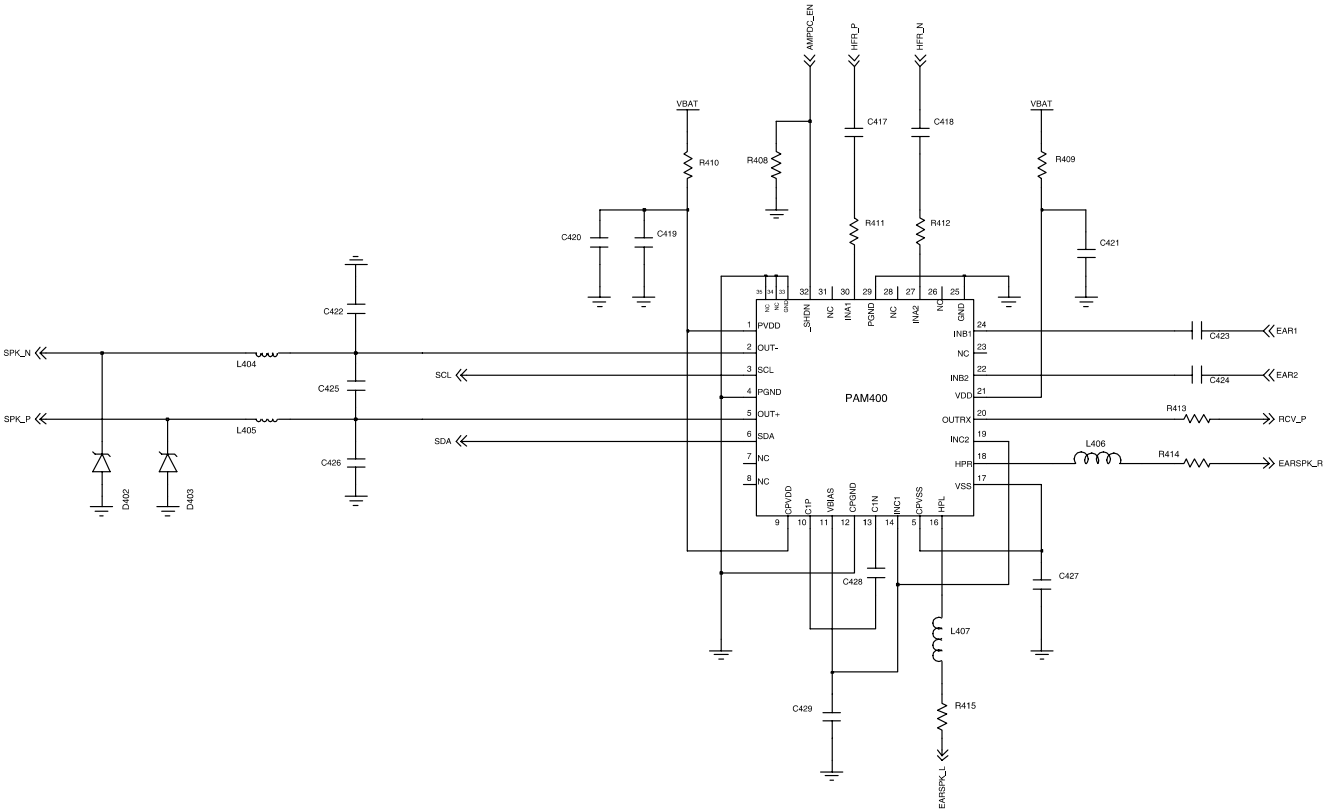

SAMSUNG Proprietary-Contents may change without notice
This Document can not be used without Samsung's authorization

9-7. Key Data Input

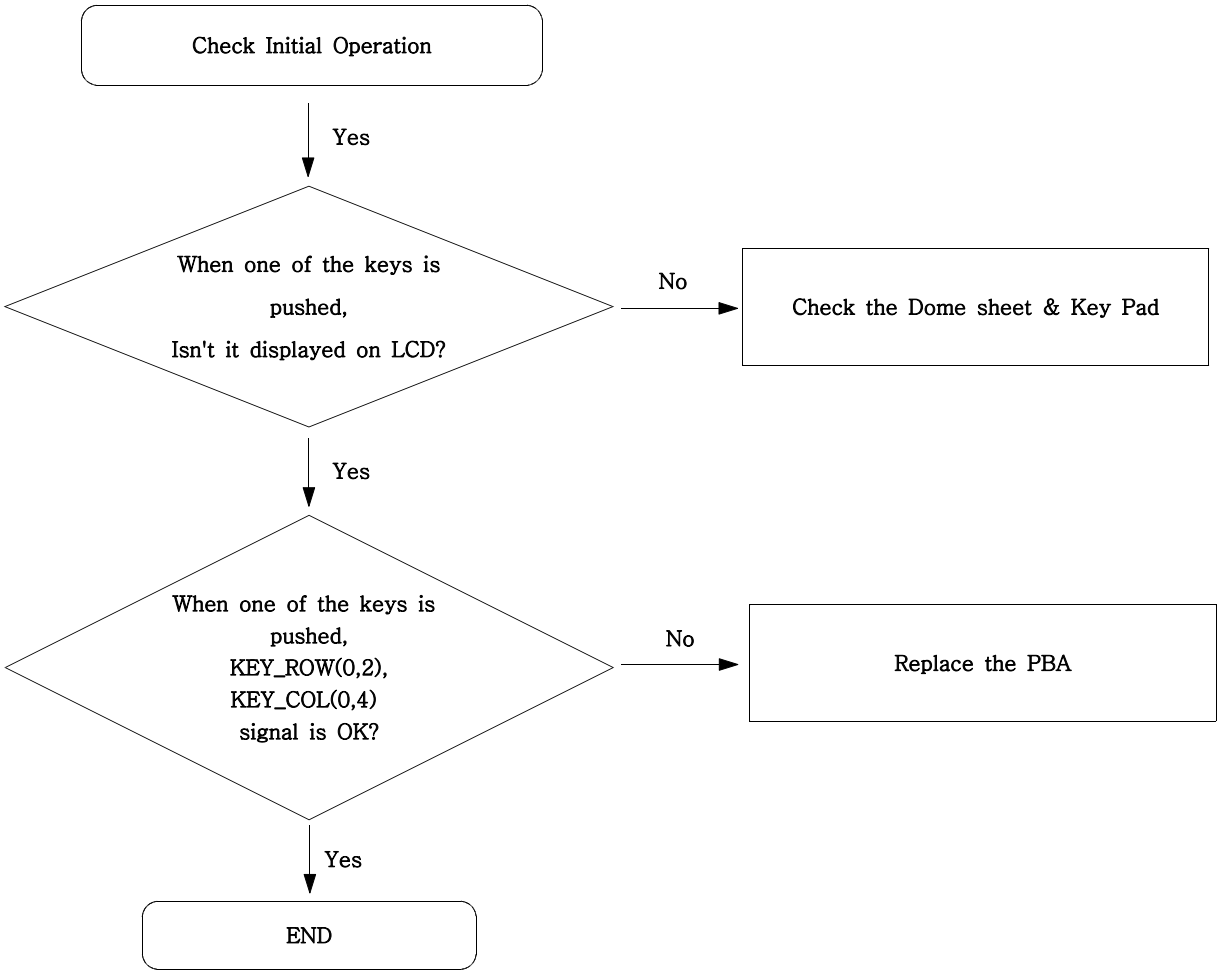

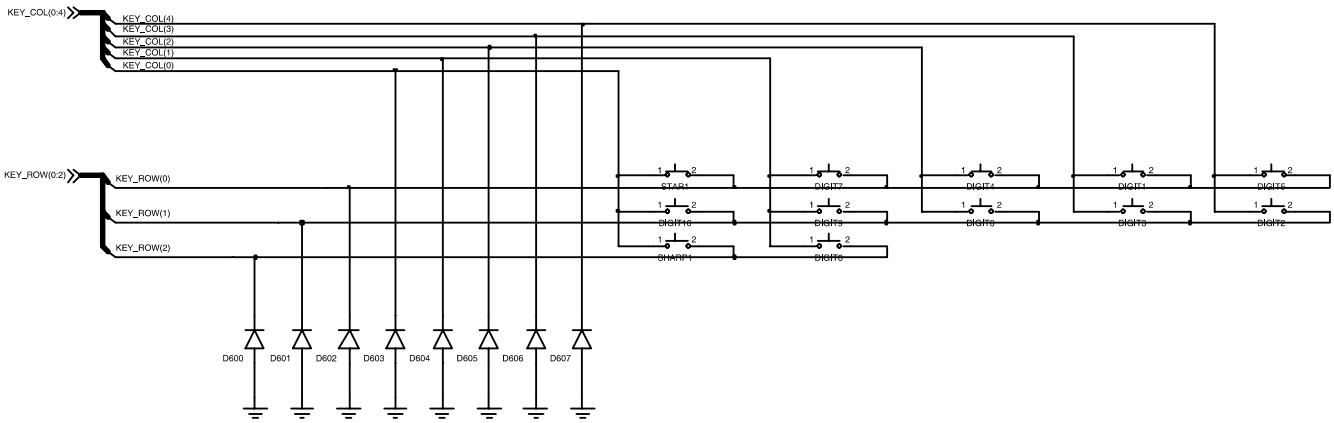

MAIN KEY MAP

SAMSUNG Proprietary-Contents may change without notice
This Document can not be used without Samsung's authorization

9-8. Receiver Part

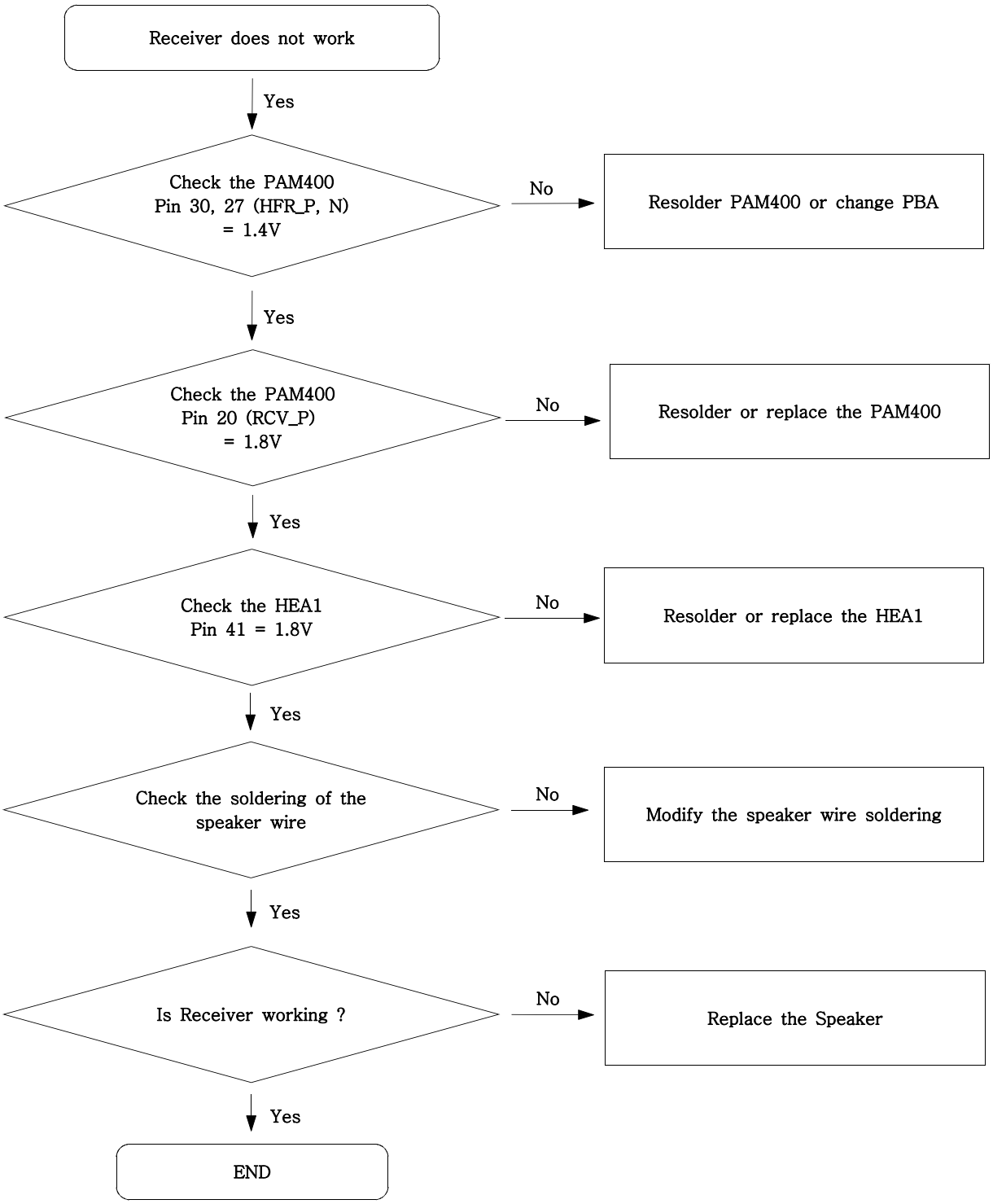

SAMSUNG Proprietary-Contents may change without notice
This Document can not be used without Samsung's authorization

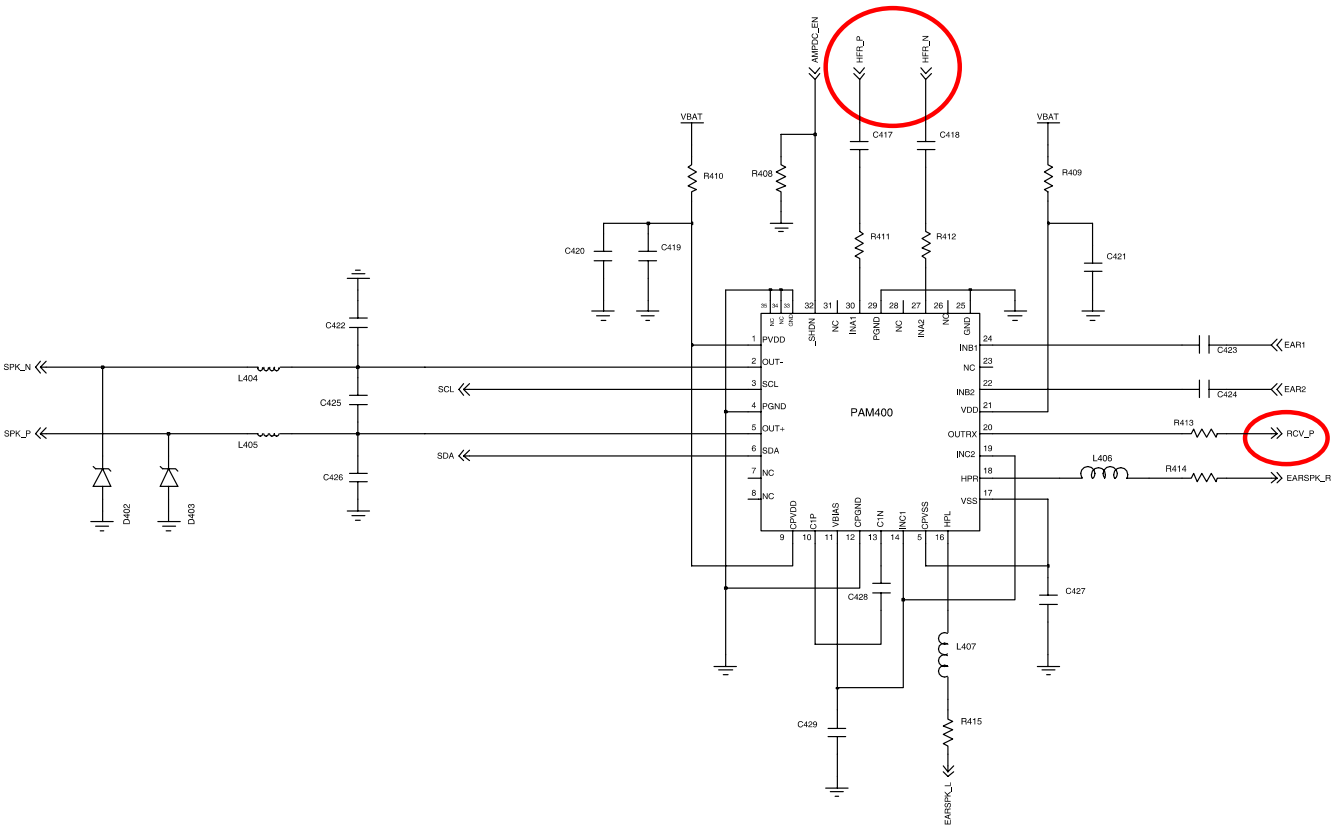

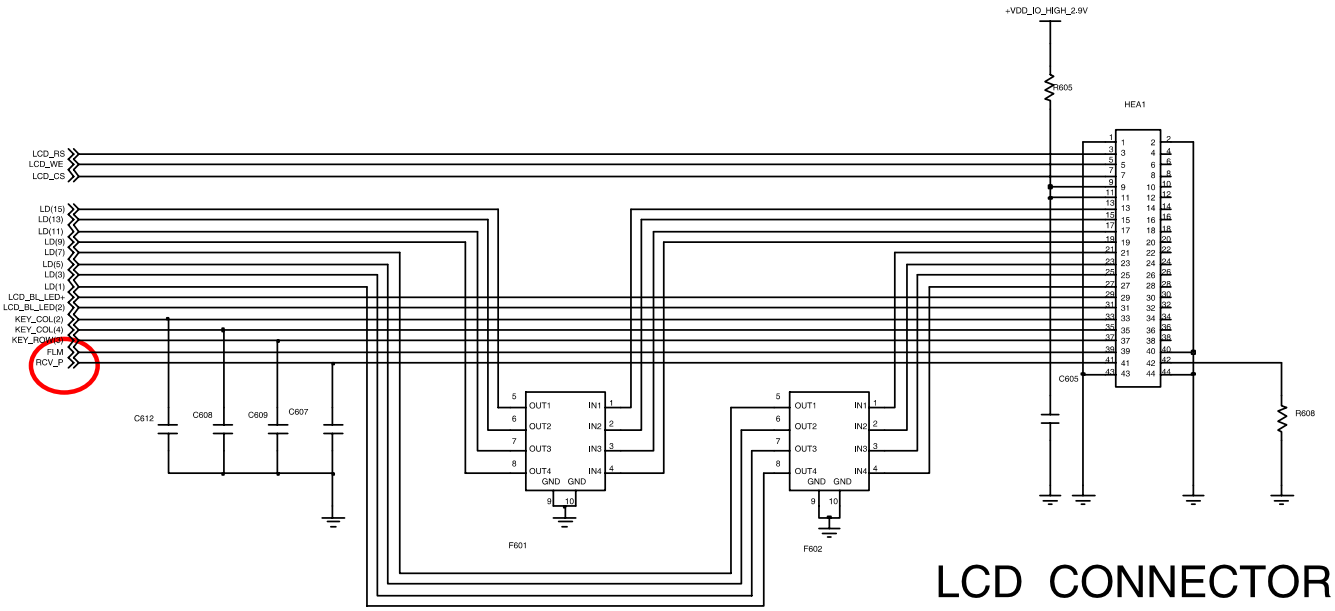

LCD CONNECTOR

SAMSUNG Proprietary-Contents may change without notice
This Document can not be used without Samsung's authorization

9-9. Back Light (for Color Main LCD)

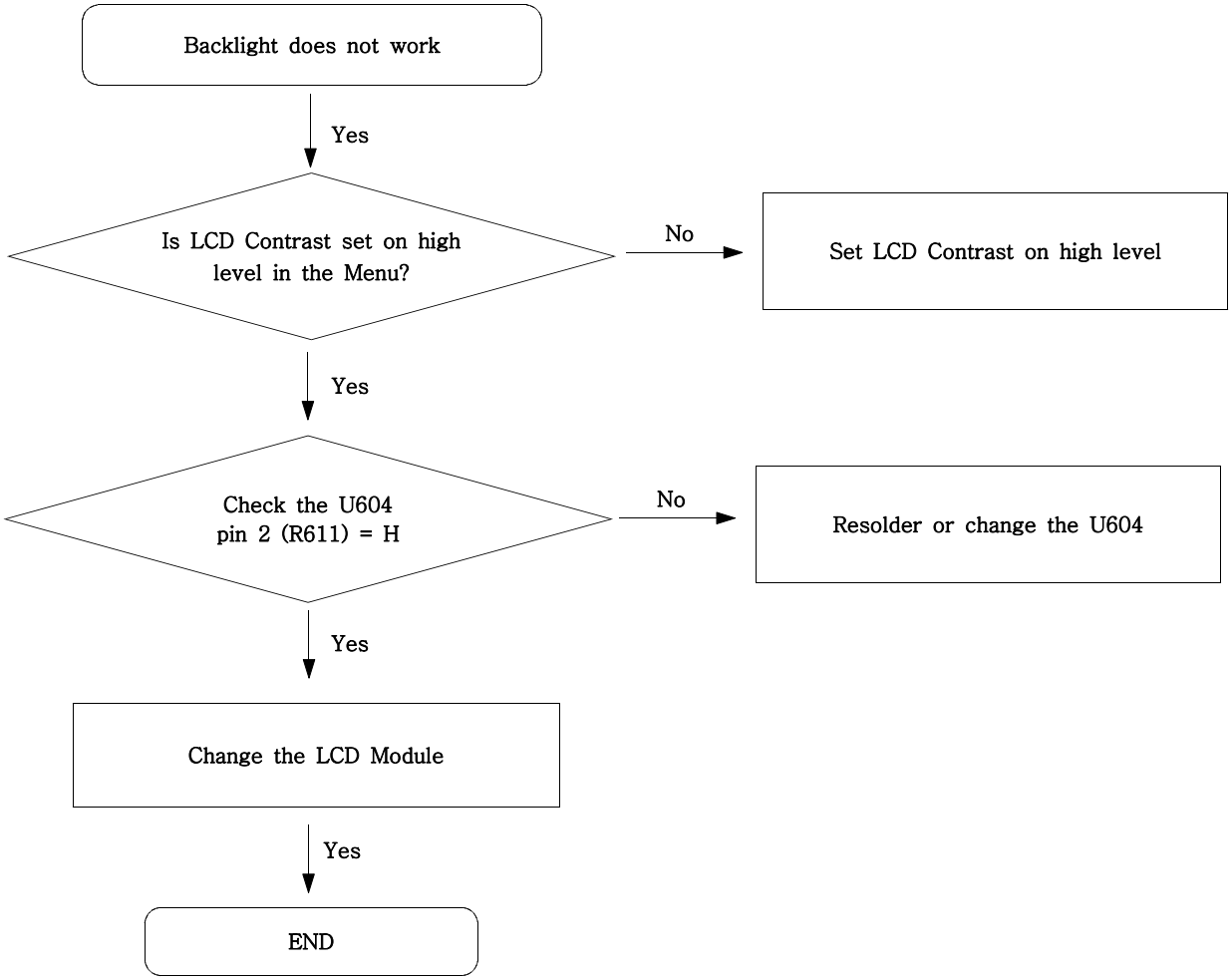

SAMSUNG Proprietary-Contents may change without notice
This Document can not be used without Samsung's authorization

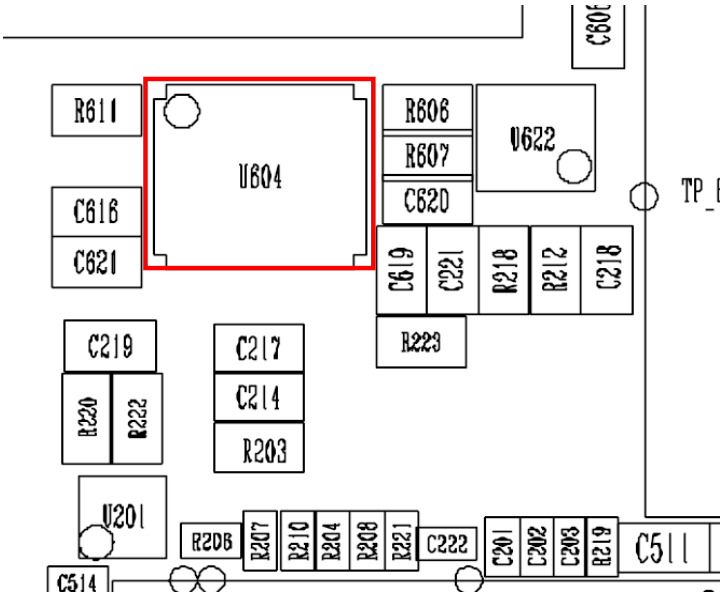

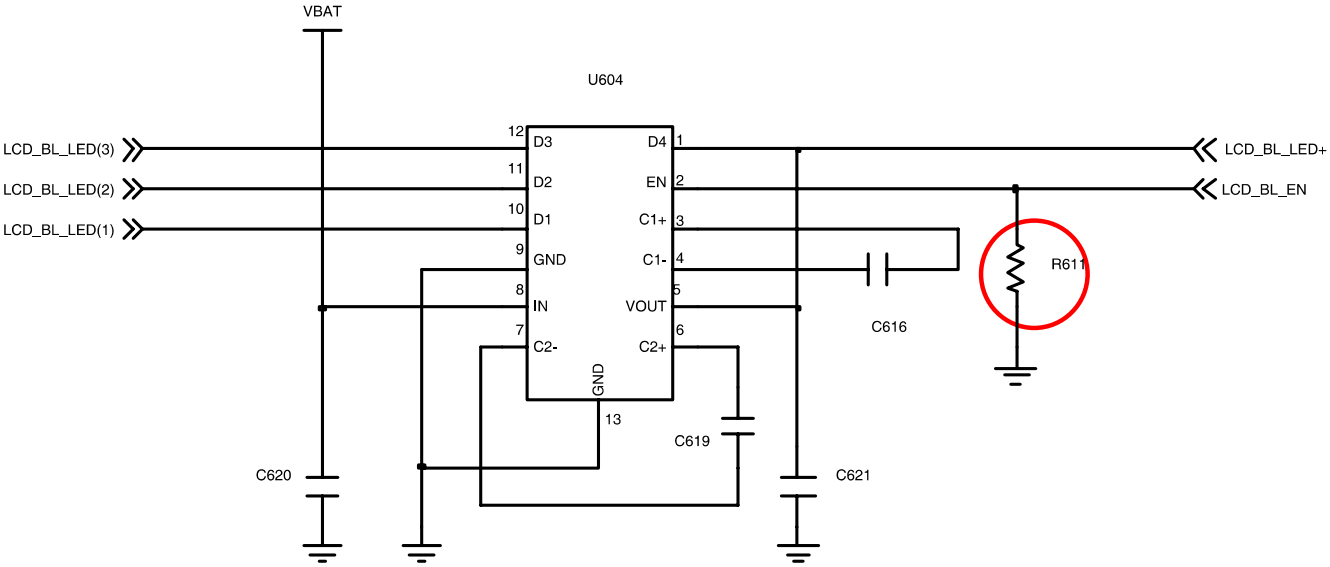

Backlight LED

SAMSUNG Proprietary-Contents may change without notice
This Document can not be used without Samsung's authorization

9-10. Key Back Light

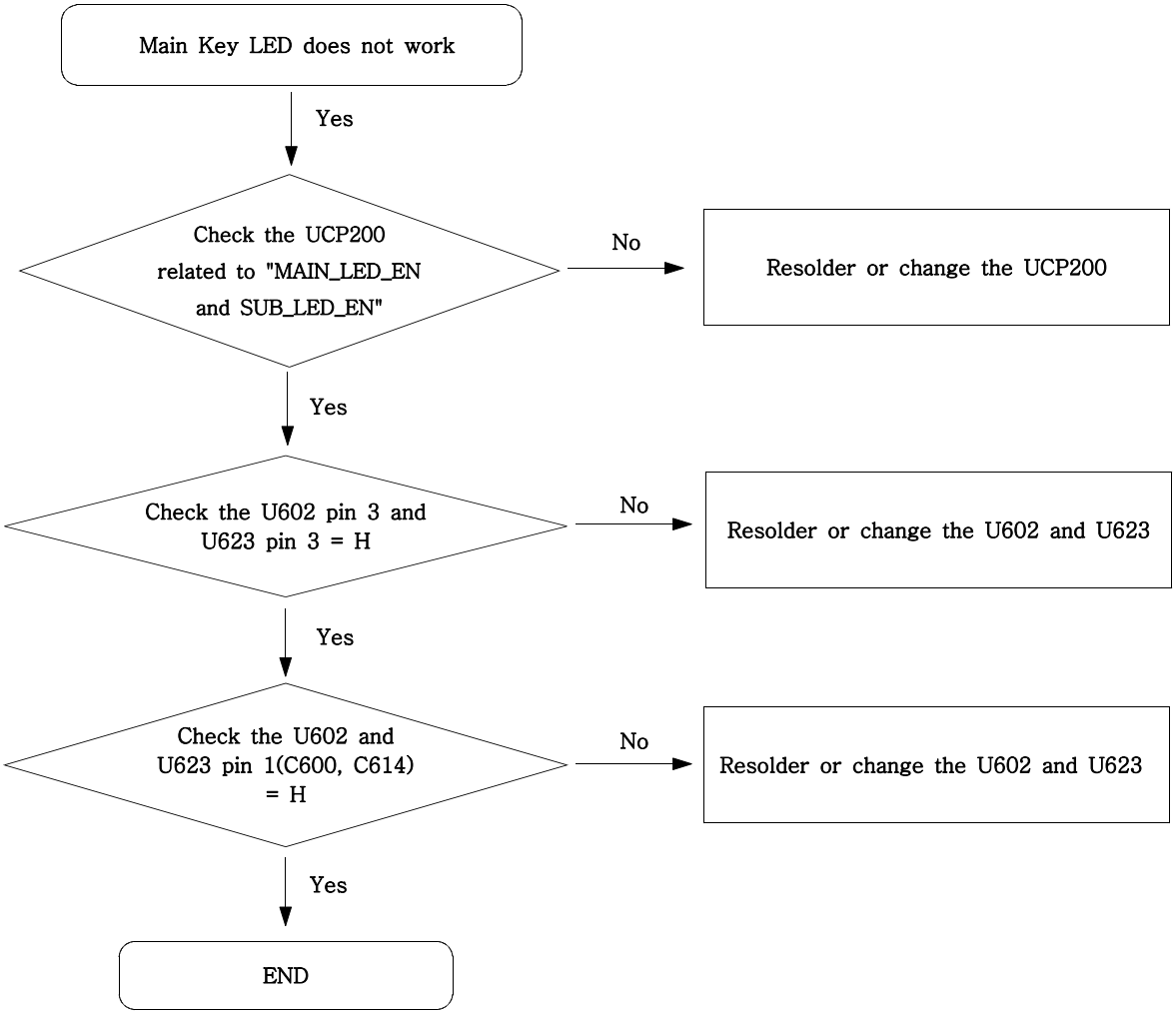

SAMSUNG Proprietary-Contents may change without notice
This Document can not be used without Samsung's authorization

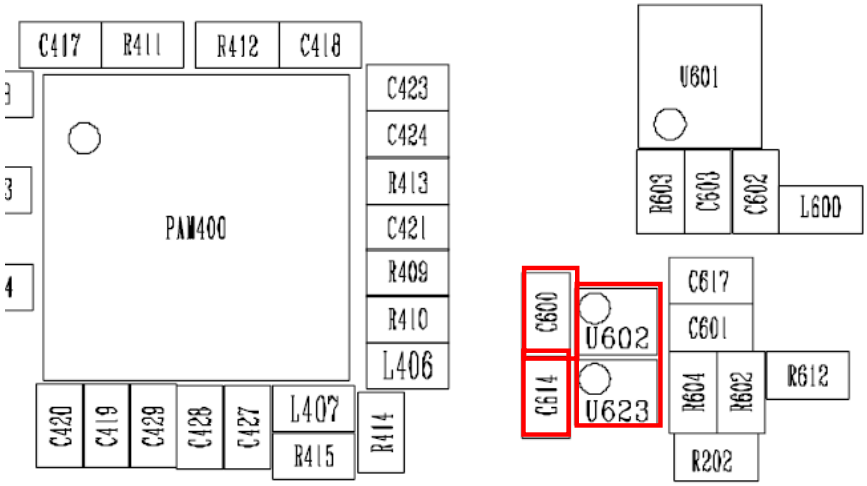

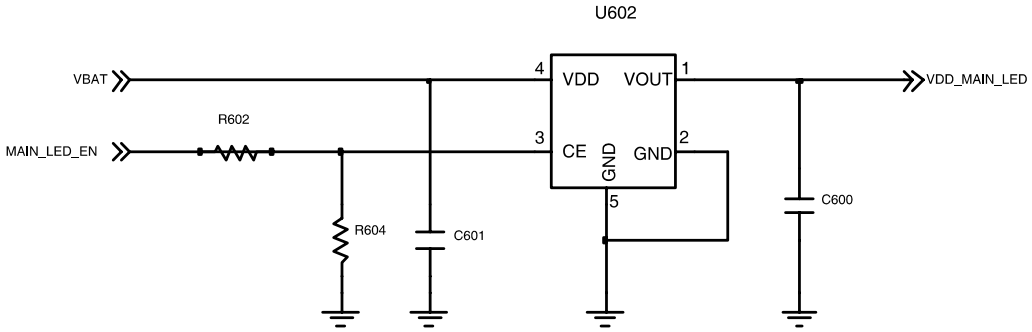

MAIN KEY LED

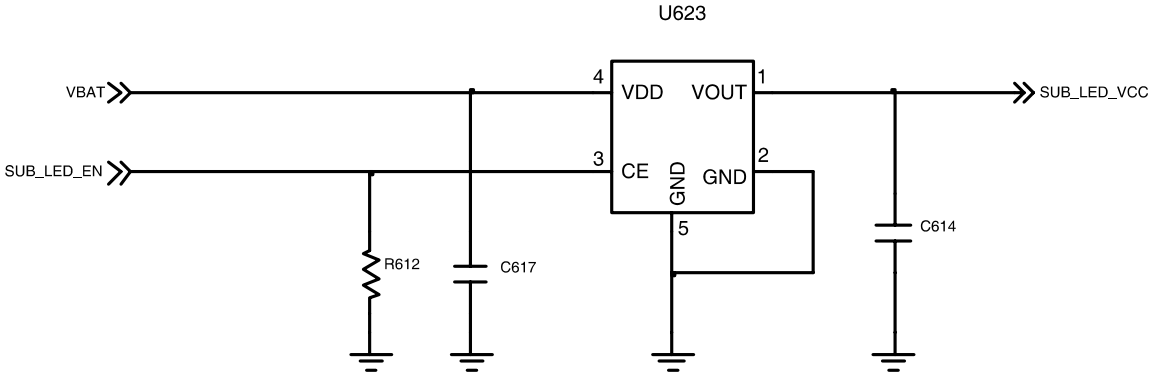

SUB KEY LED

SAMSUNG Proprietary-Contents may change without notice
This Document can not be used without Samsung's authorization

9-11. Camera part

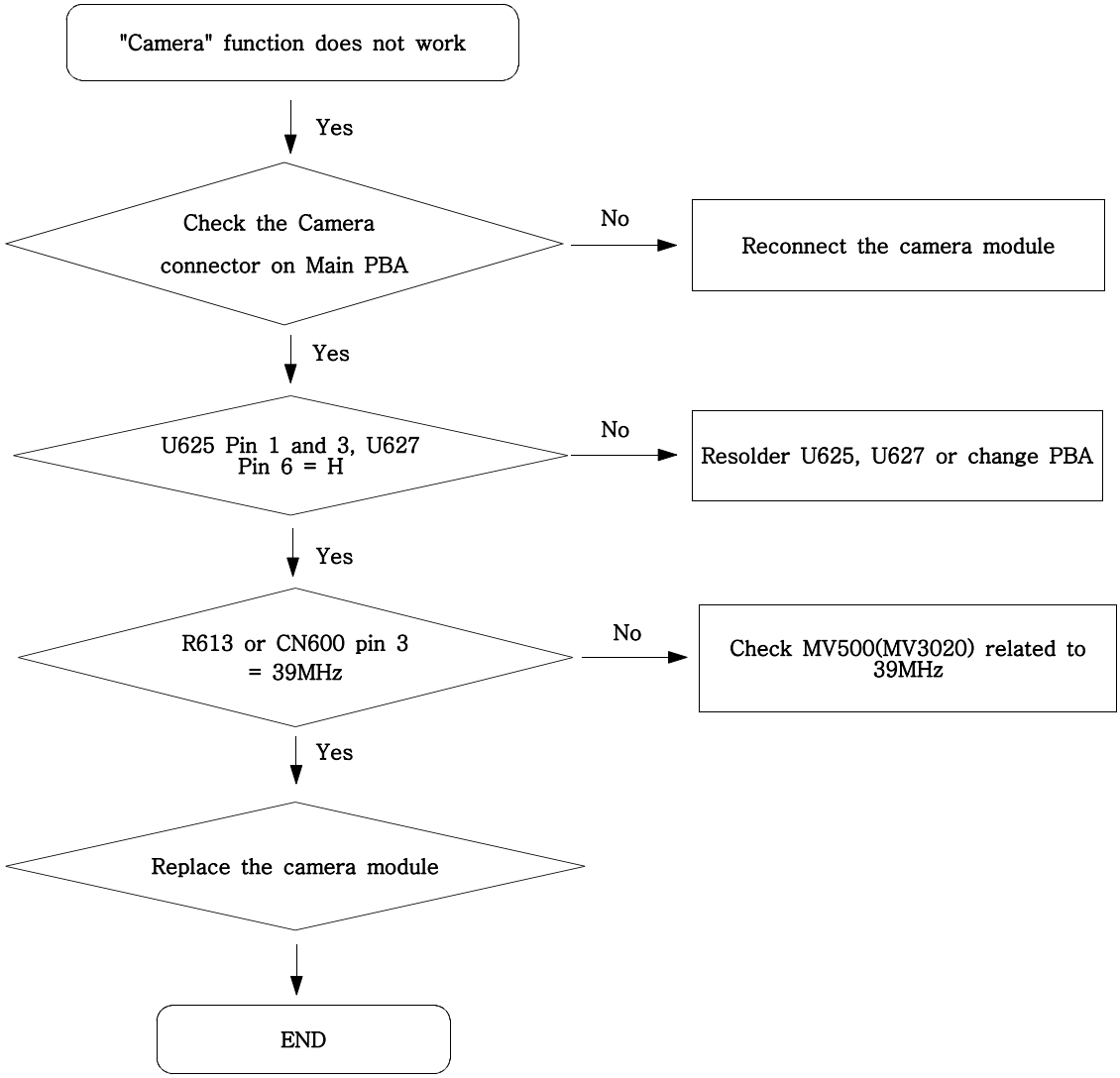

SAMSUNG Proprietary-Contents may change without notice
This Document can not be used without Samsung's authorization

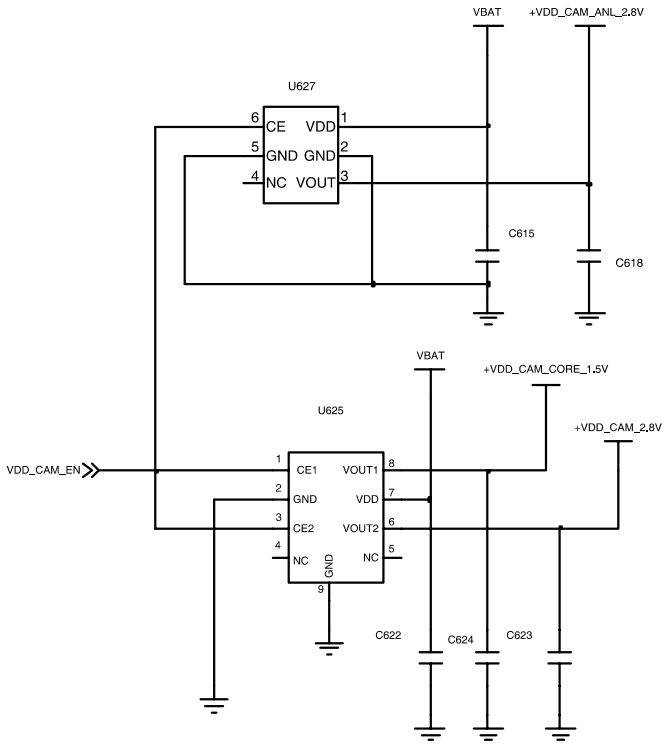

CAM LDO

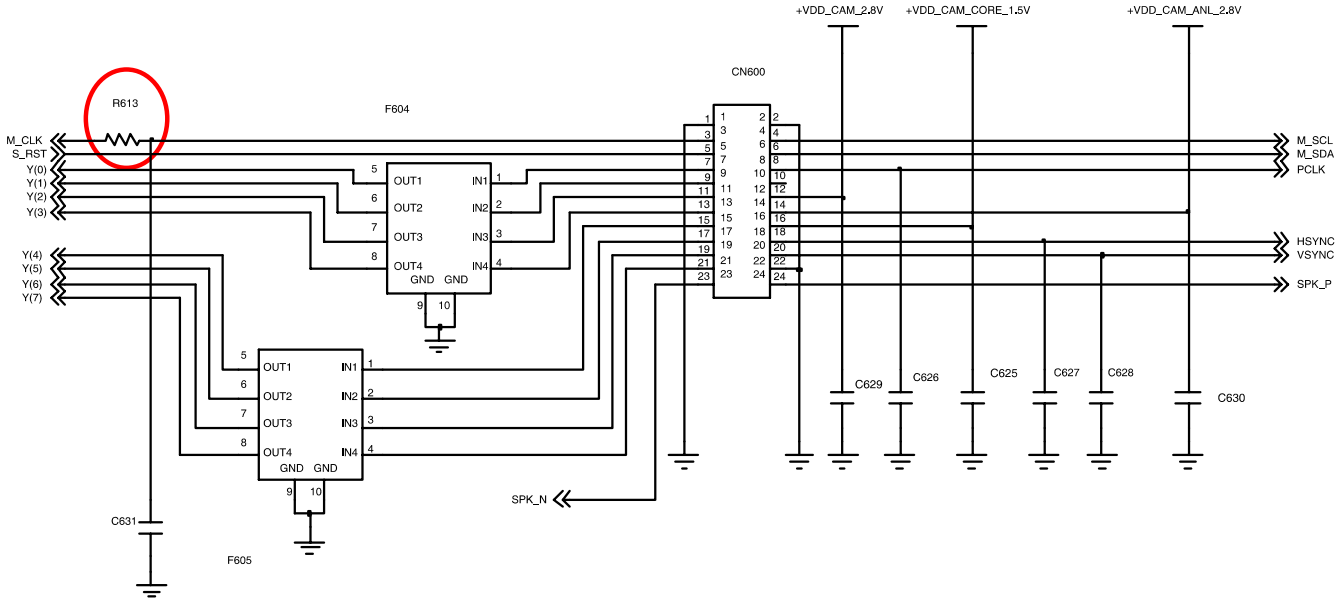

CAM CONNECTOR

SAMSUNG Proprietary-Contents may change without notice
This Document can not be used without Samsung's authorization

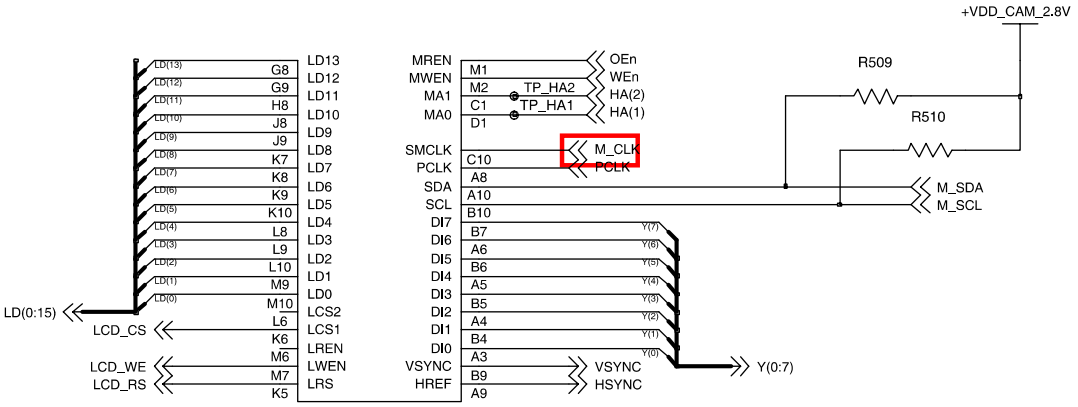

IMAGE_DSP MV3020 FOR 2M CAMERA

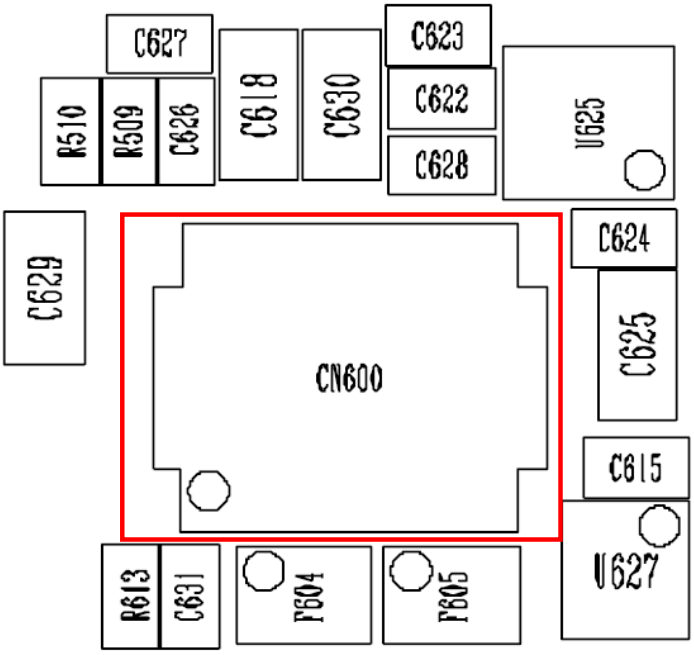

SAMSUNG Proprietary-Contents may change without notice
This Document can not be used without Samsung's authorization

9-12. BLUETOOTH

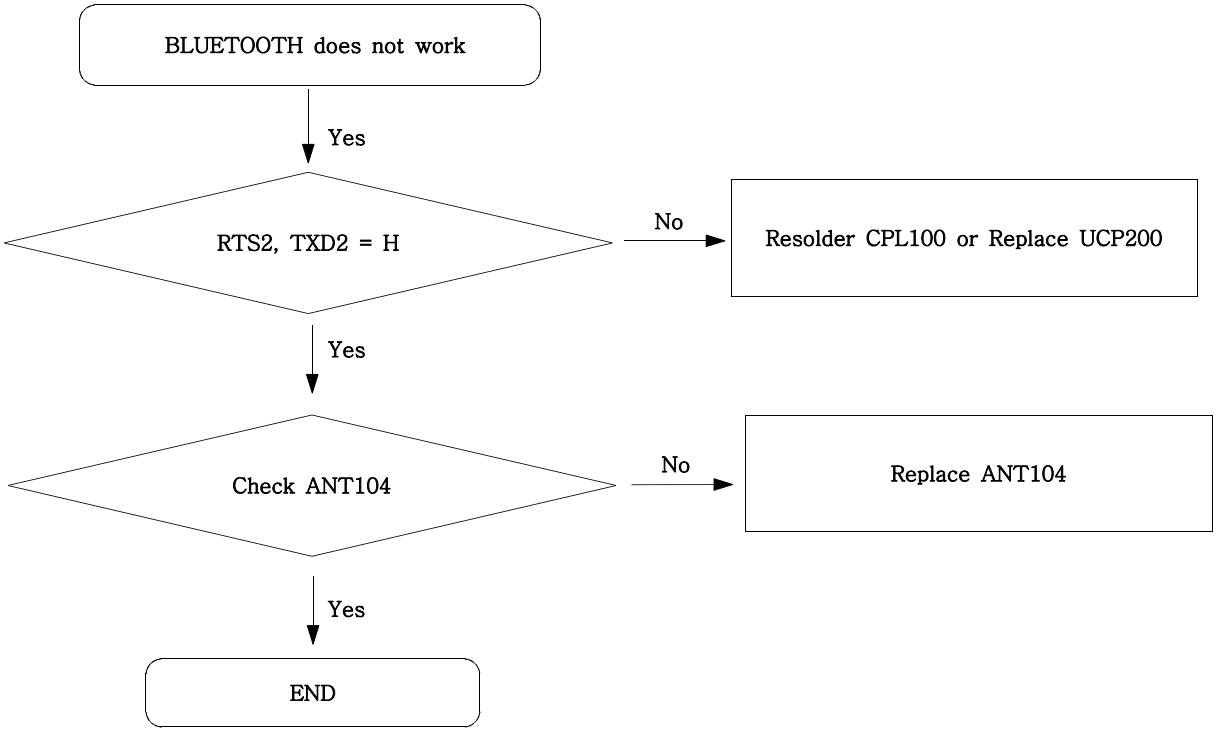

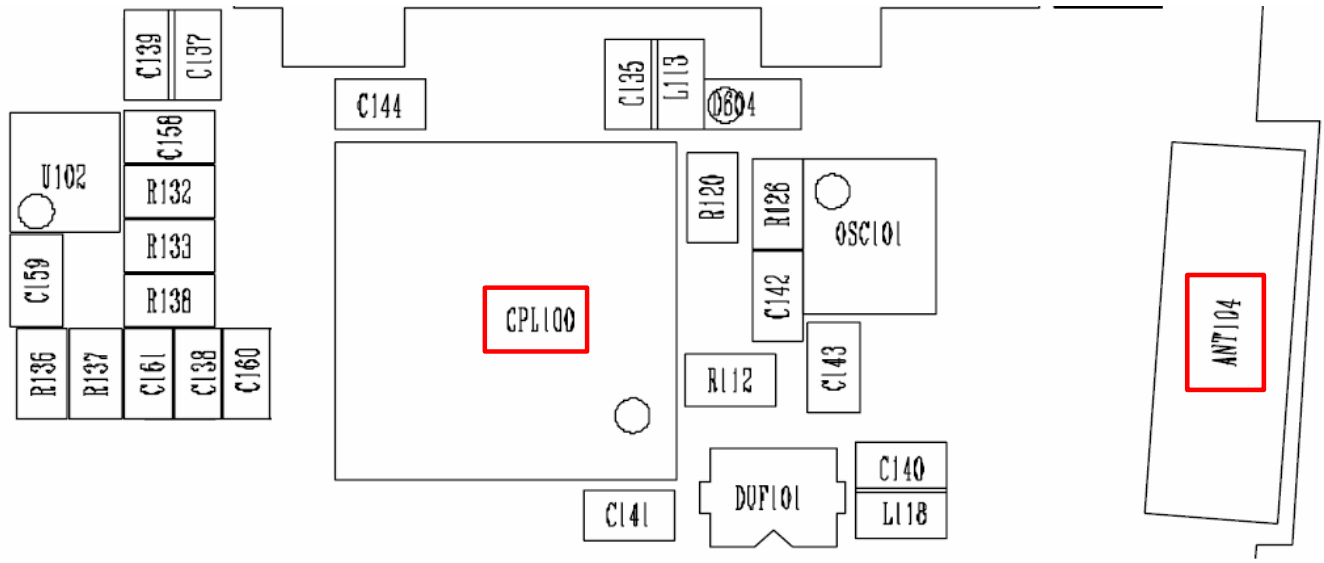

SAMSUNG Proprietary-Contents may change without notice
This Document can not be used without Samsung's authorization

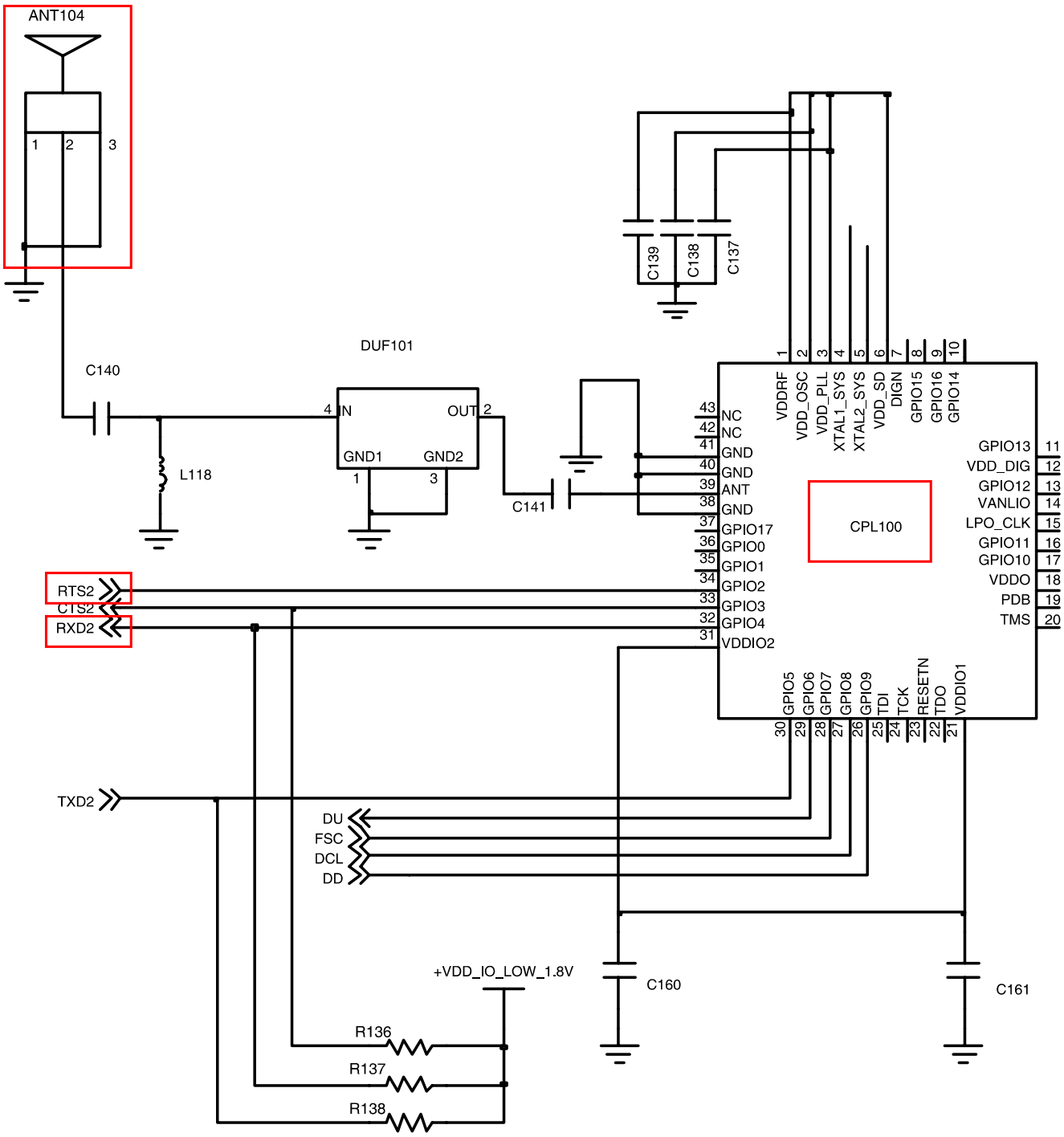

SAMSUNG Proprietary-Contents may change without notice
This Document can not be used without Samsung's authorization

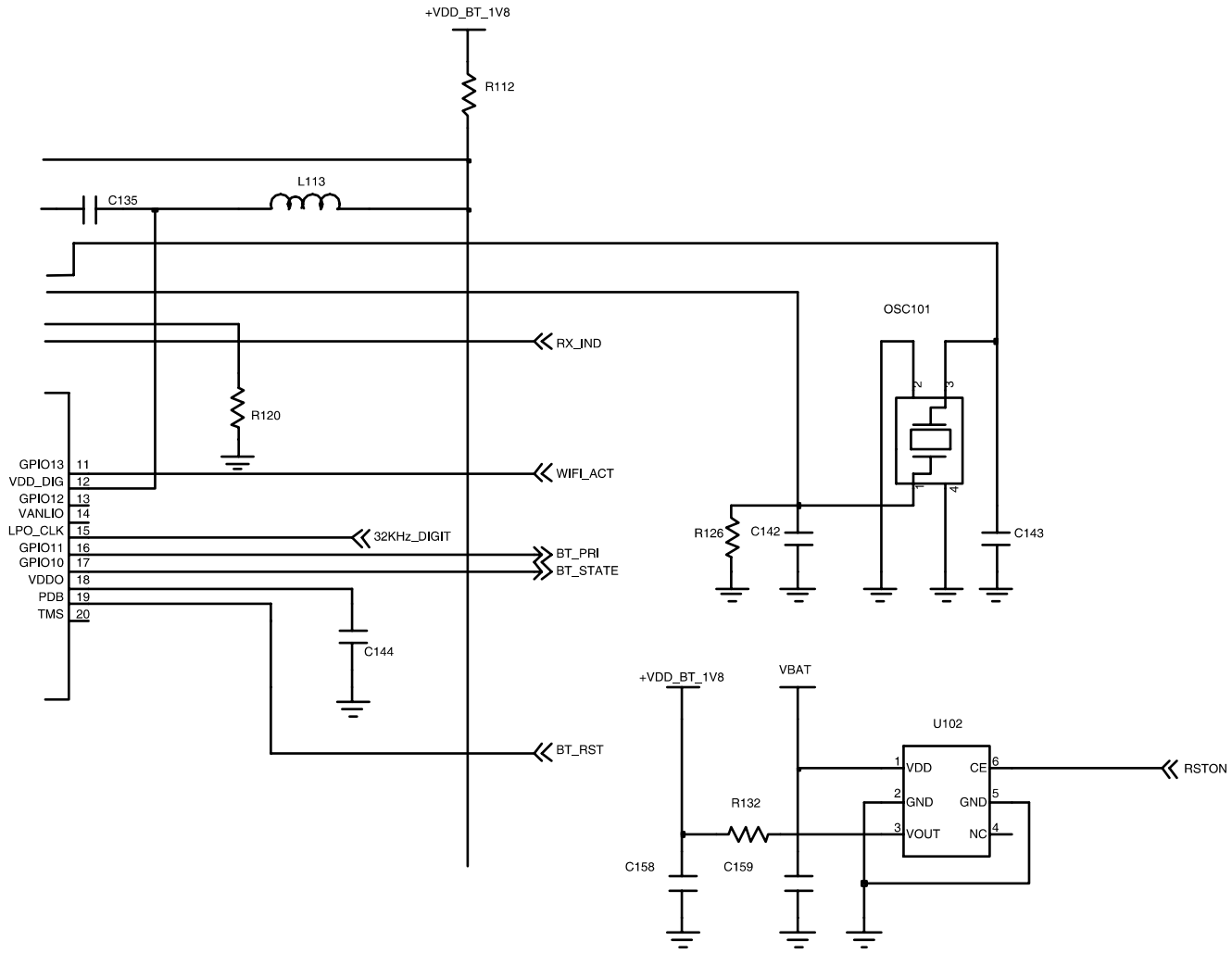

SAMSUNG Proprietary-Contents may change without notice
This Document can not be used without Samsung's authorization

9-13. GSM Receiver

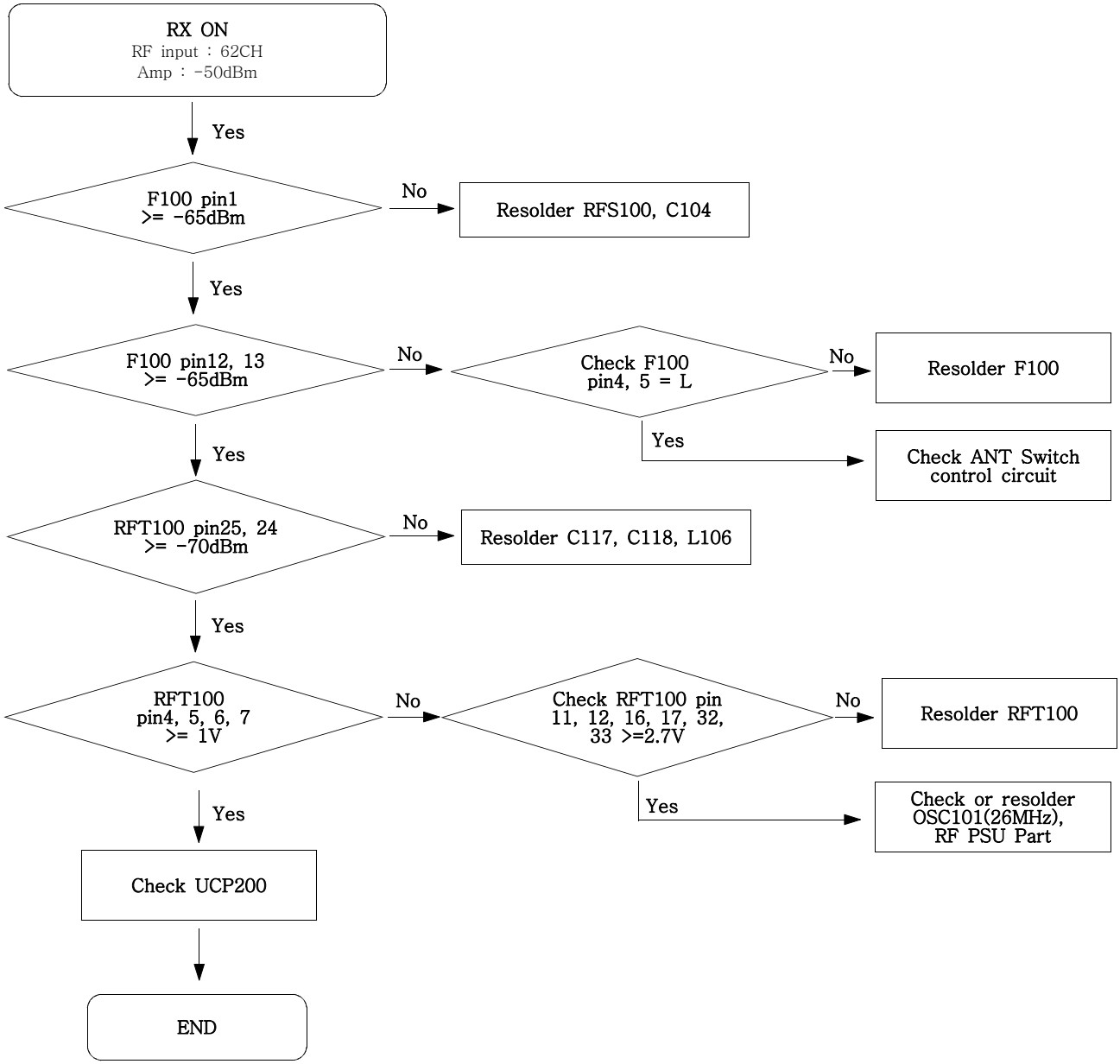

SAMSUNG Proprietary-Contents may change without notice
This Document can not be used without Samsung's authorization

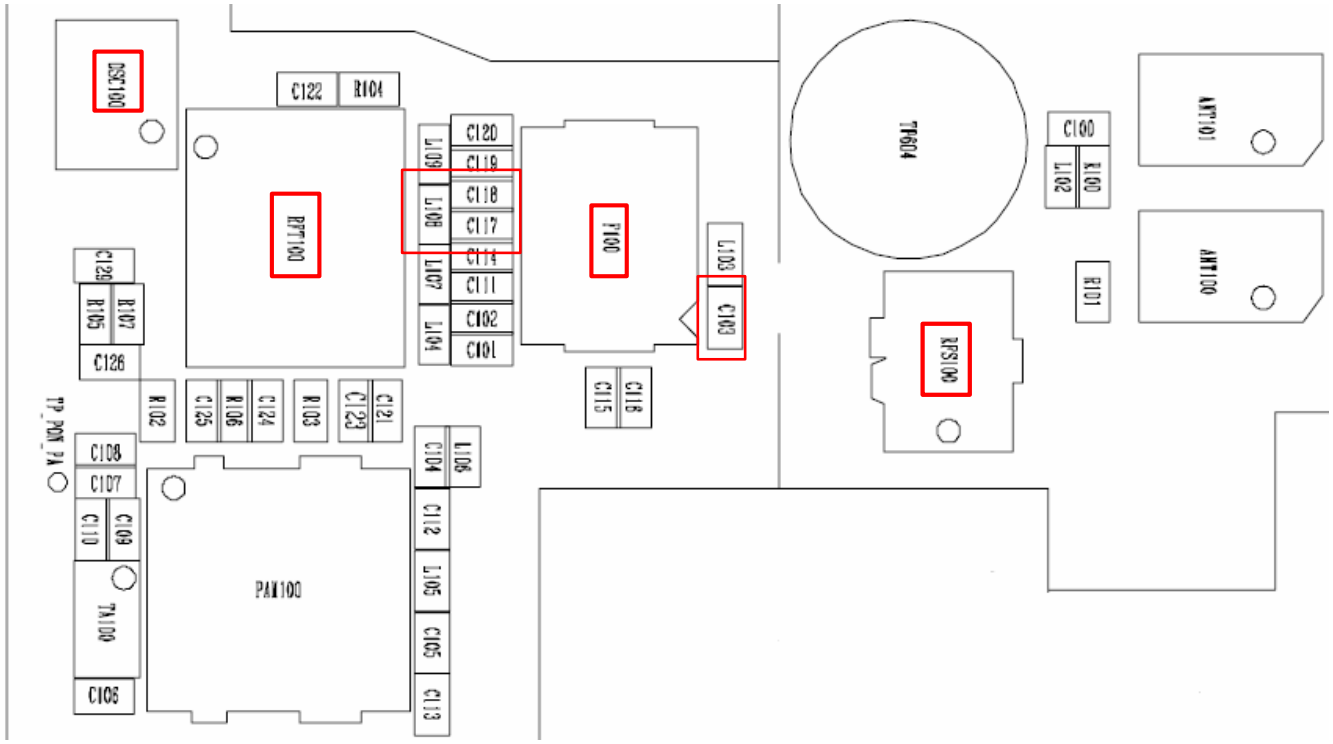

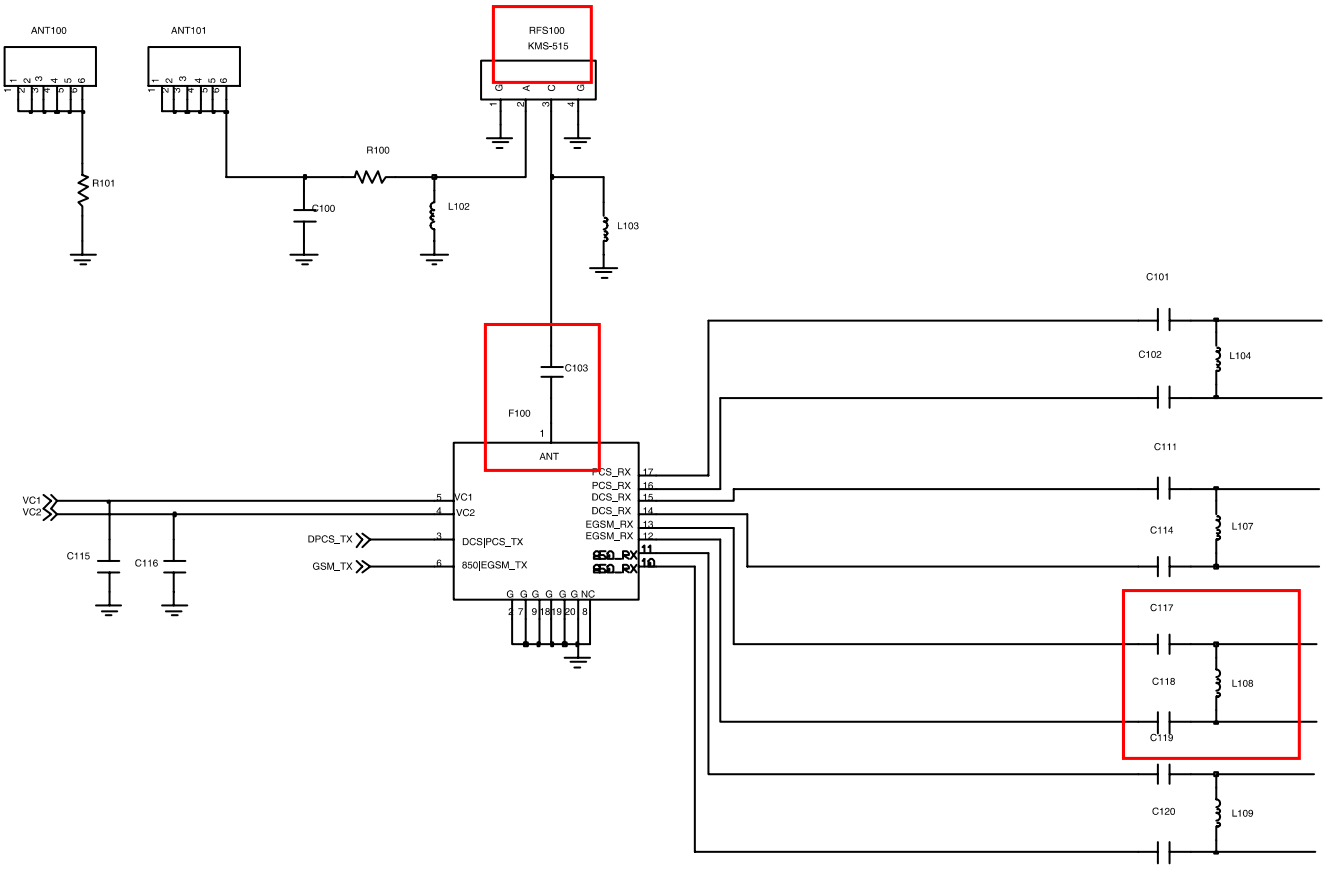

SAMSUNG Proprietary-Contents may change without notice
This Document can not be used without Samsung's authorization

9-14. GSM Transmitter

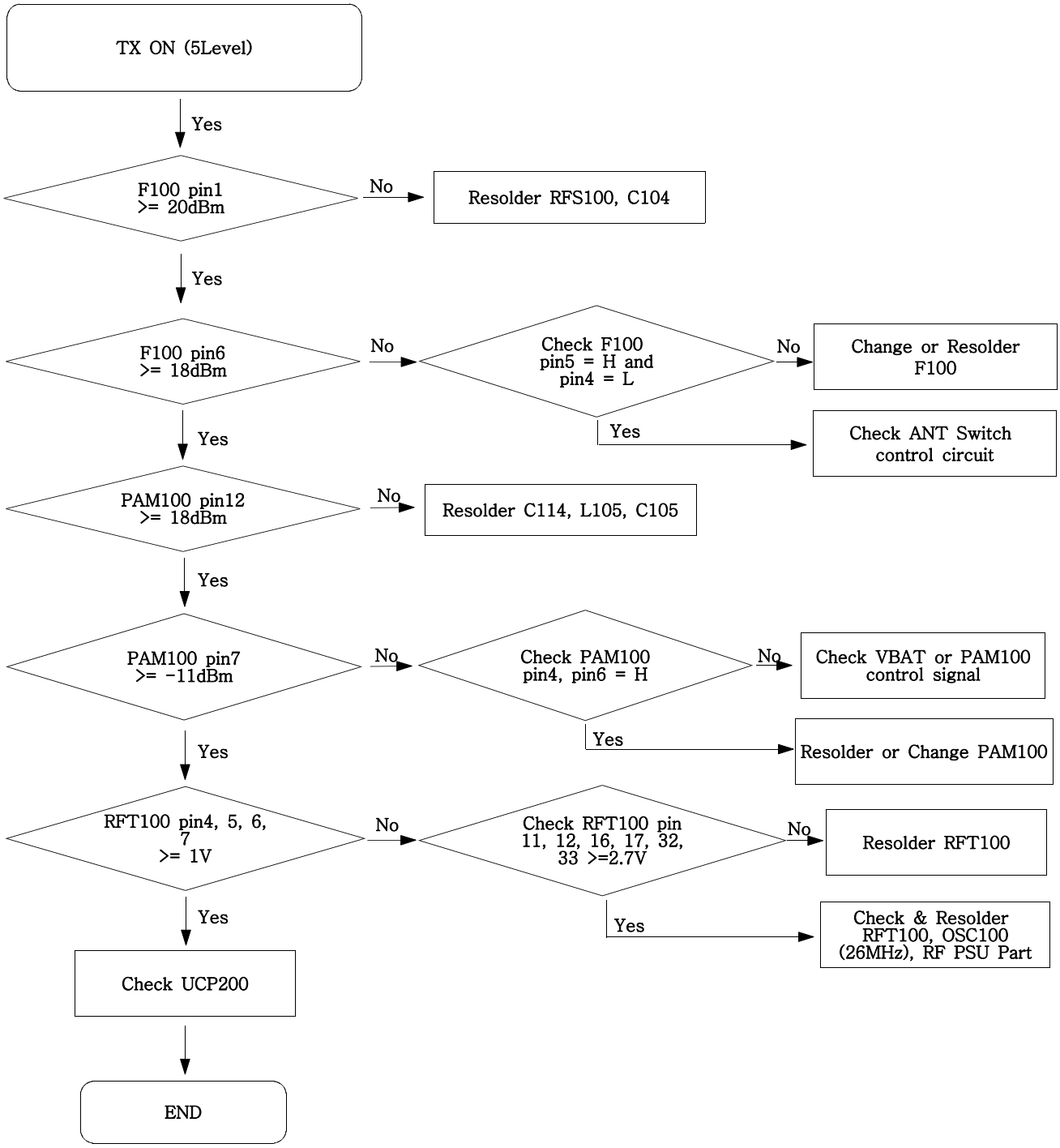

SAMSUNG Proprietary-Contents may change without notice
This Document can not be used without Samsung's authorization

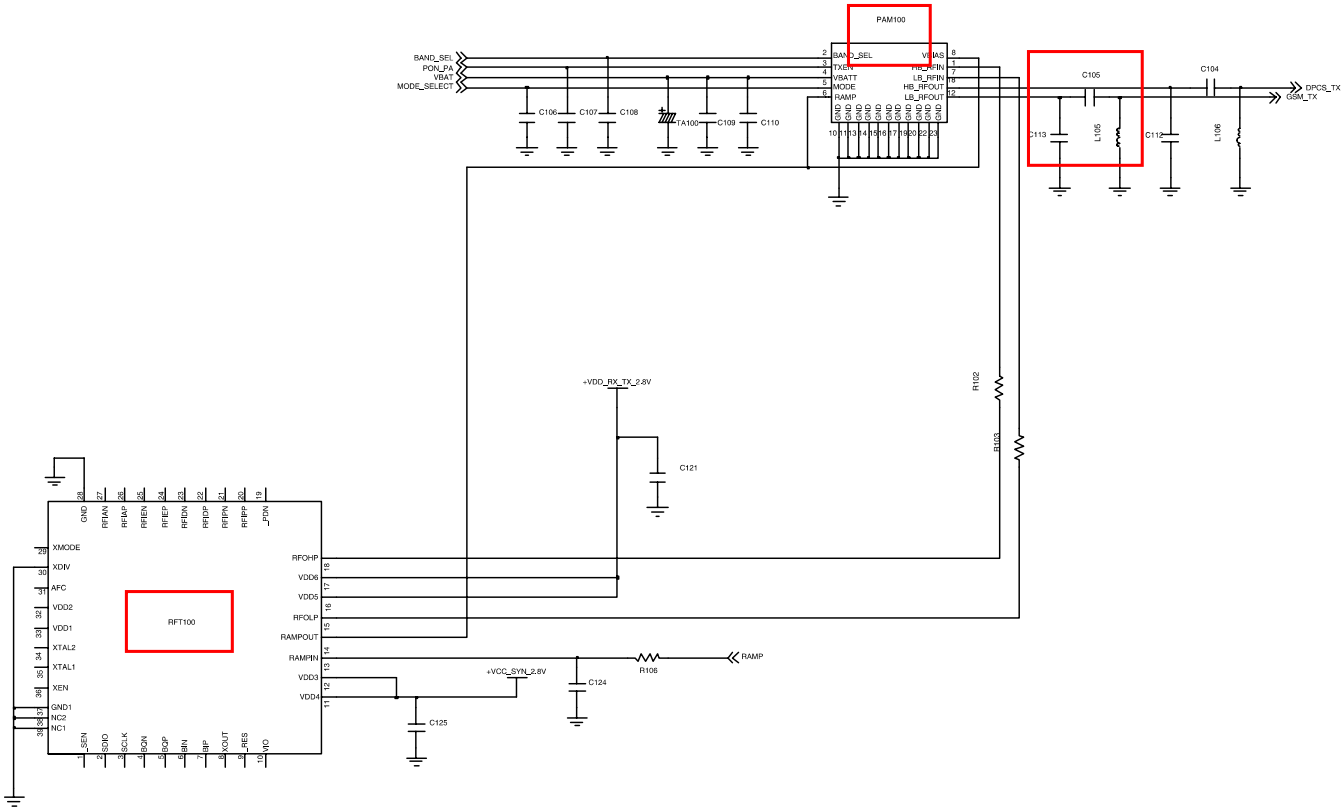

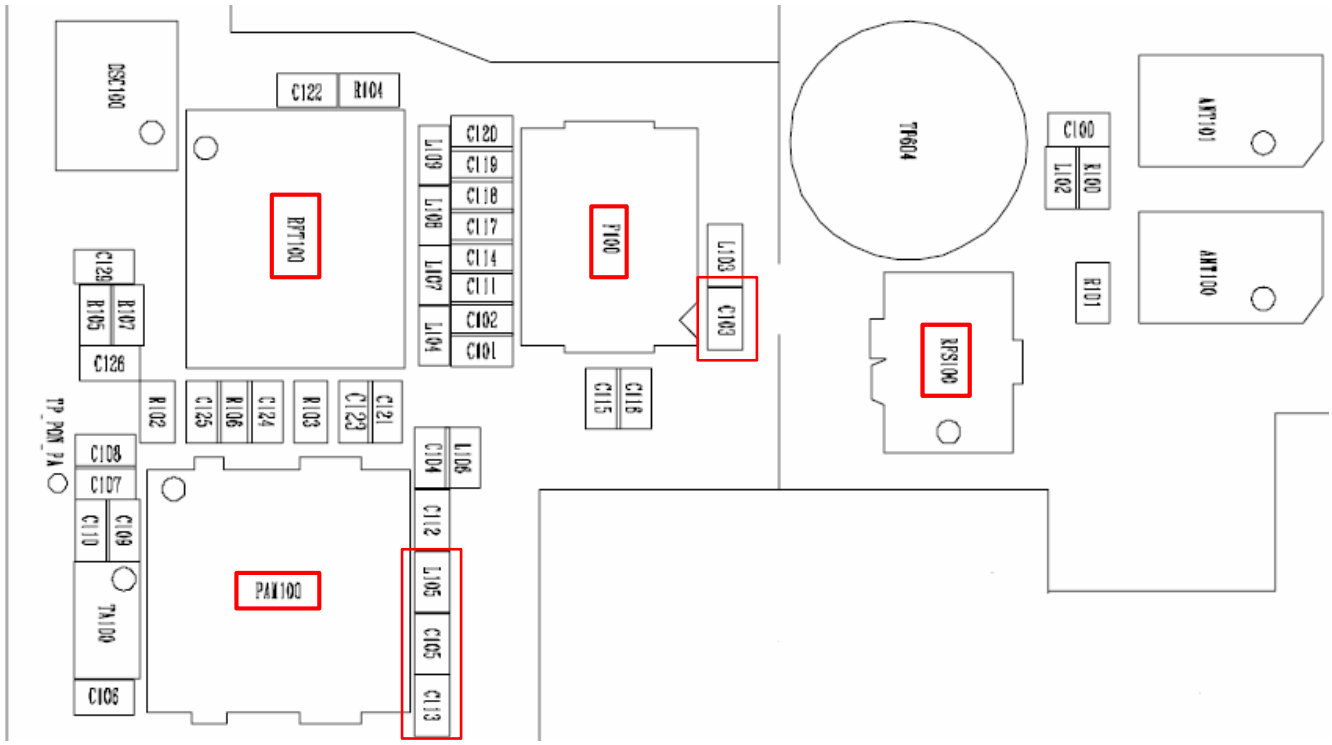

SAMSUNG Proprietary-Contents may change without notice
This Document can not be used without Samsung's authorization

9-15. DCS Receiver

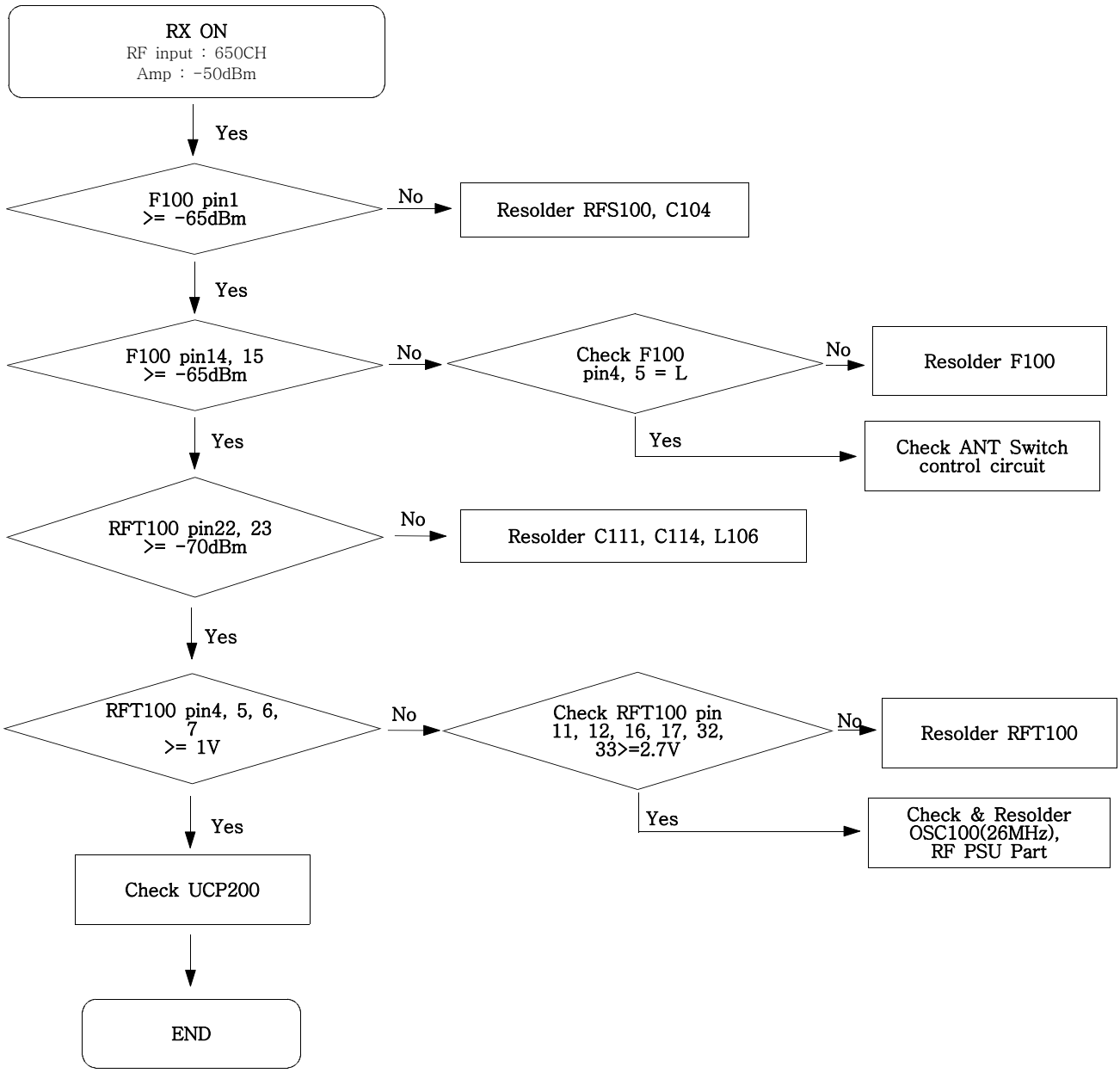

SAMSUNG Proprietary-Contents may change without notice
This Document can not be used without Samsung's authorization

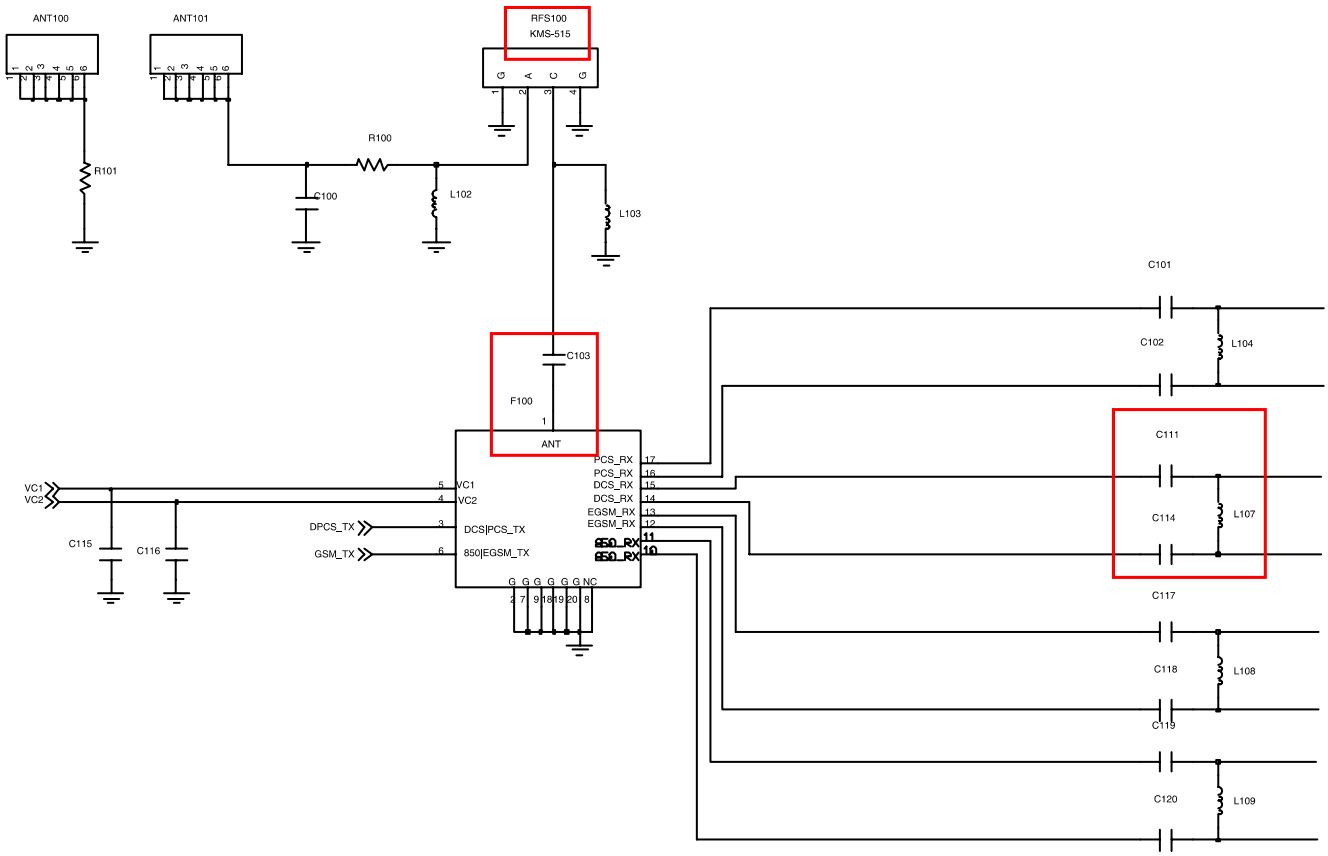

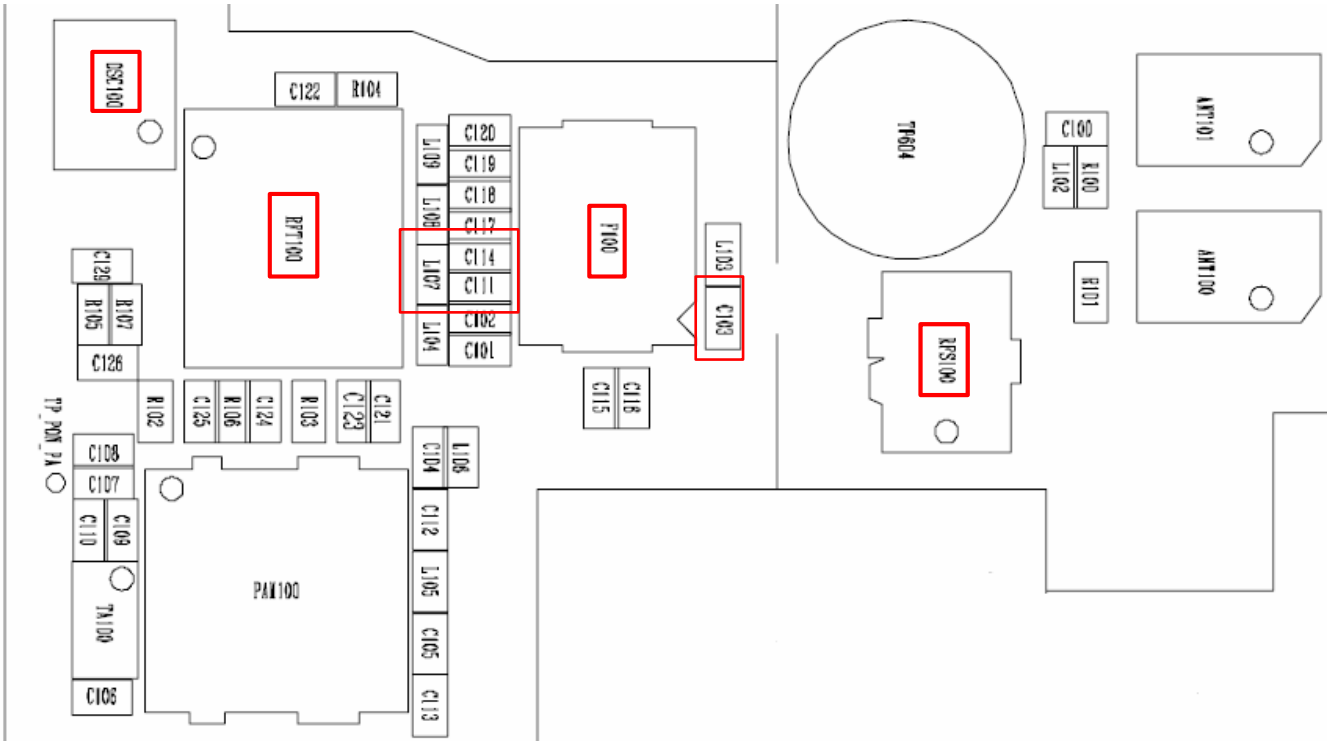

SAMSUNG Proprietary-Contents may change without notice
This Document can not be used without Samsung's authorization

9-16. DCS Transmitter

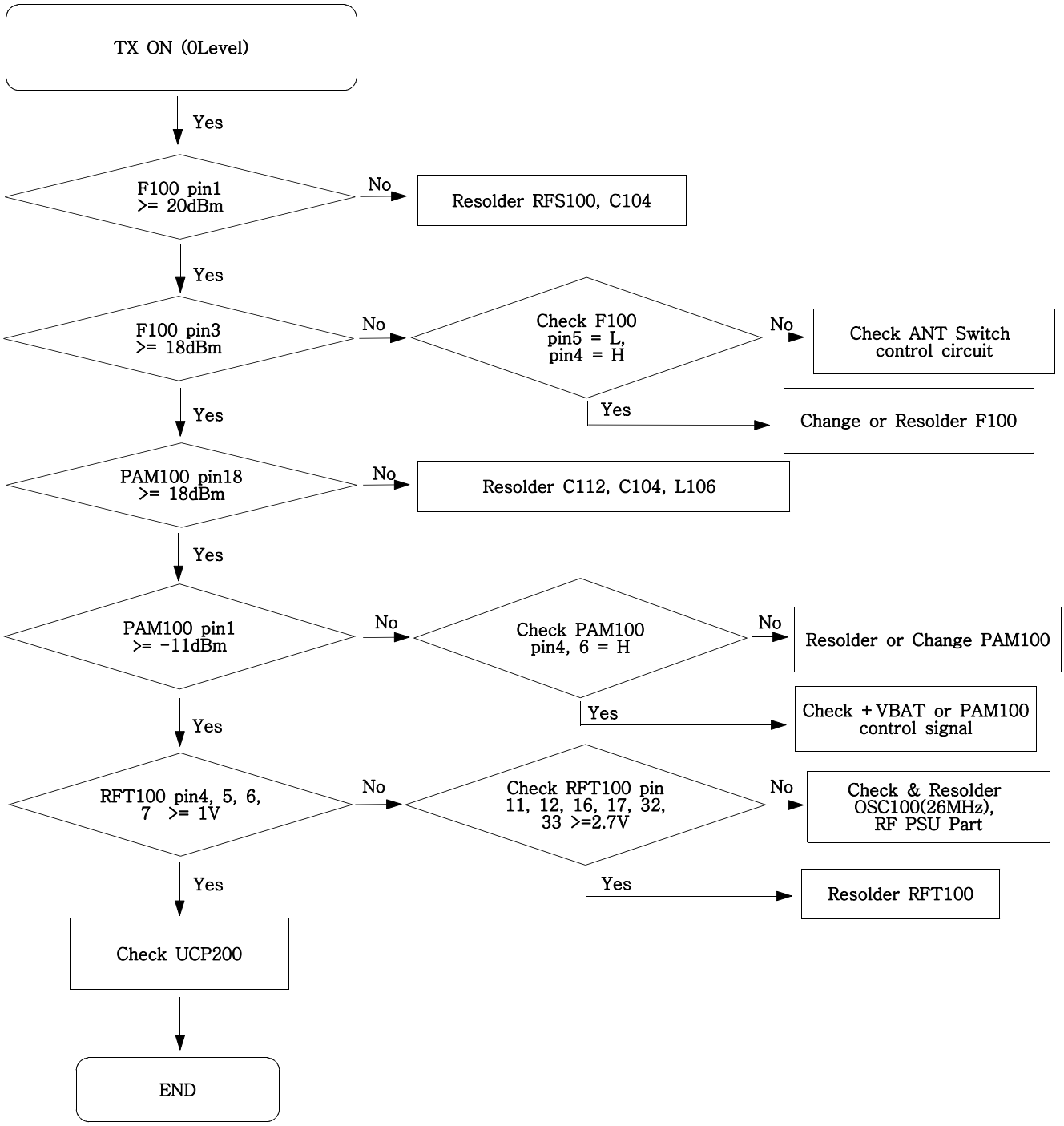

SAMSUNG Proprietary-Contents may change without notice
This Document can not be used without Samsung's authorization

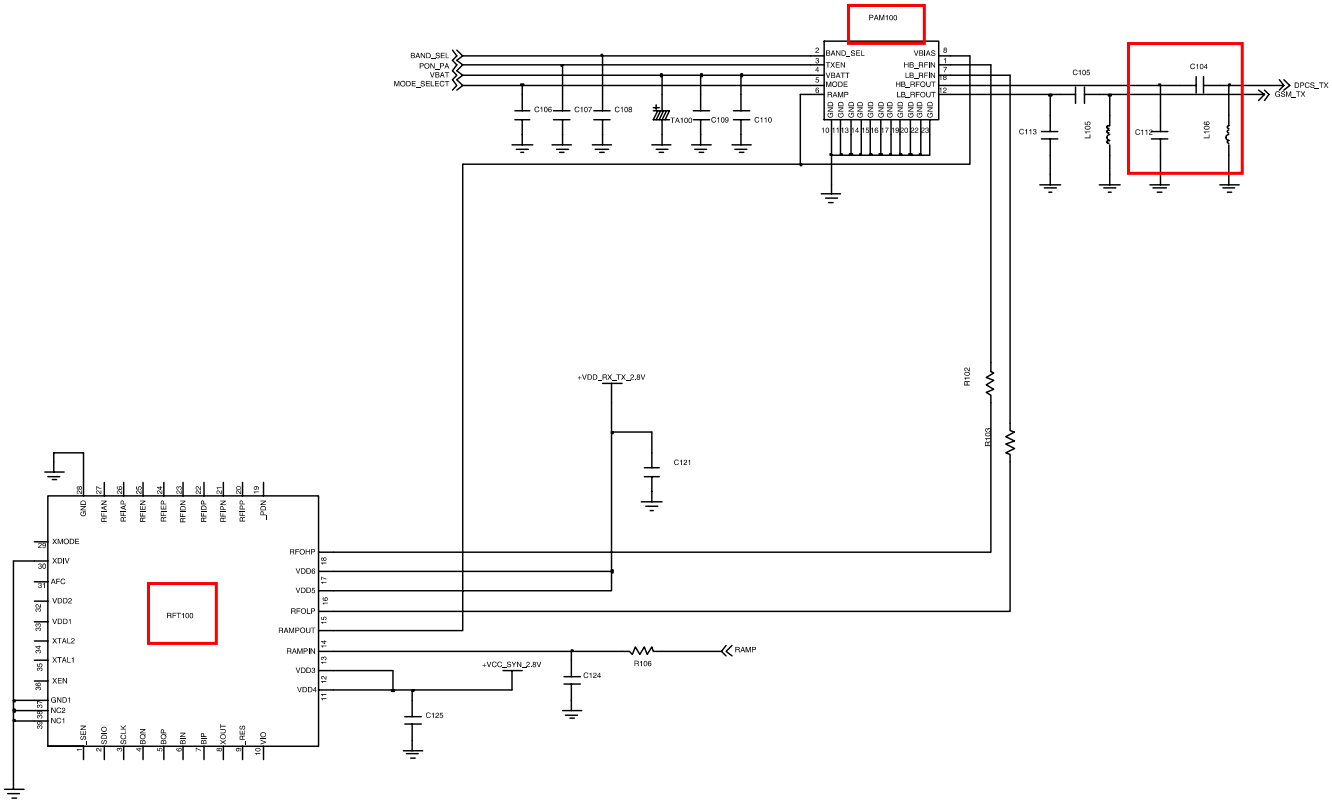

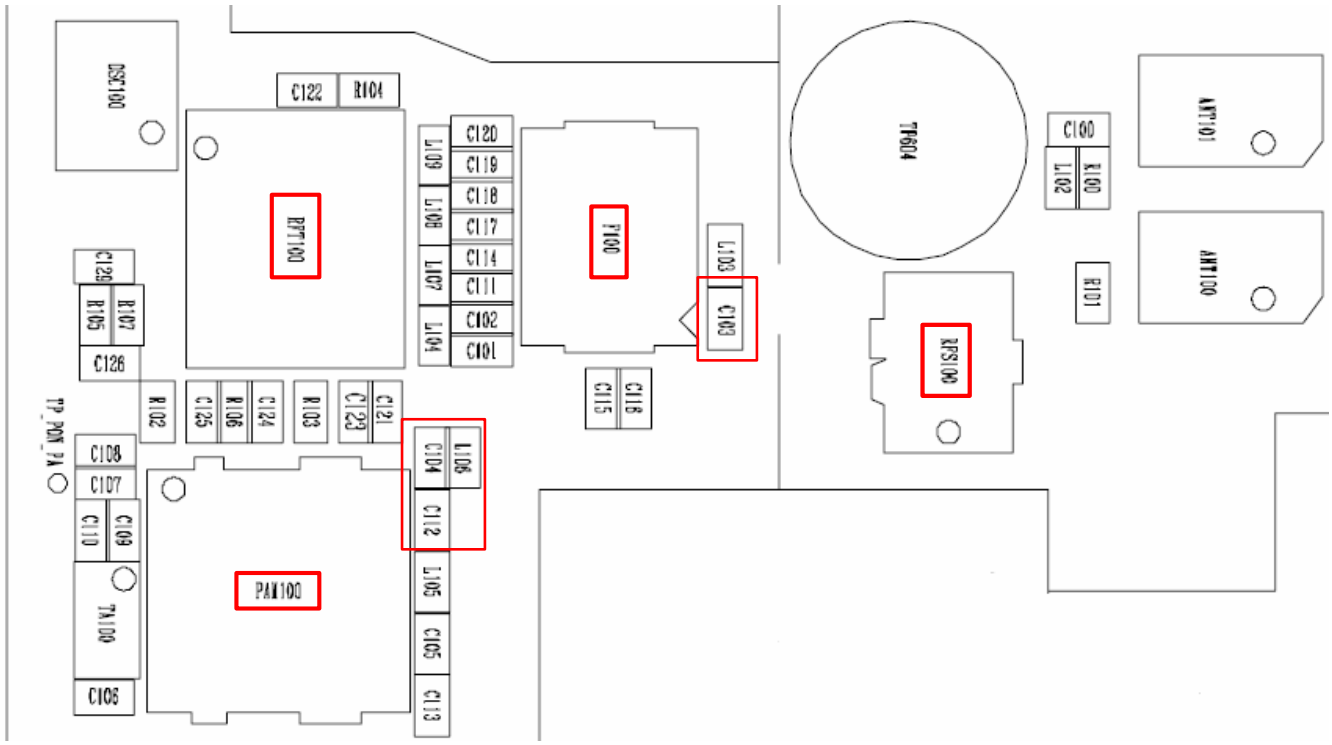

SAMSUNG Proprietary-Contents may change without notice
This Document can not be used without Samsung's authorization

9-17. PCS Receiver

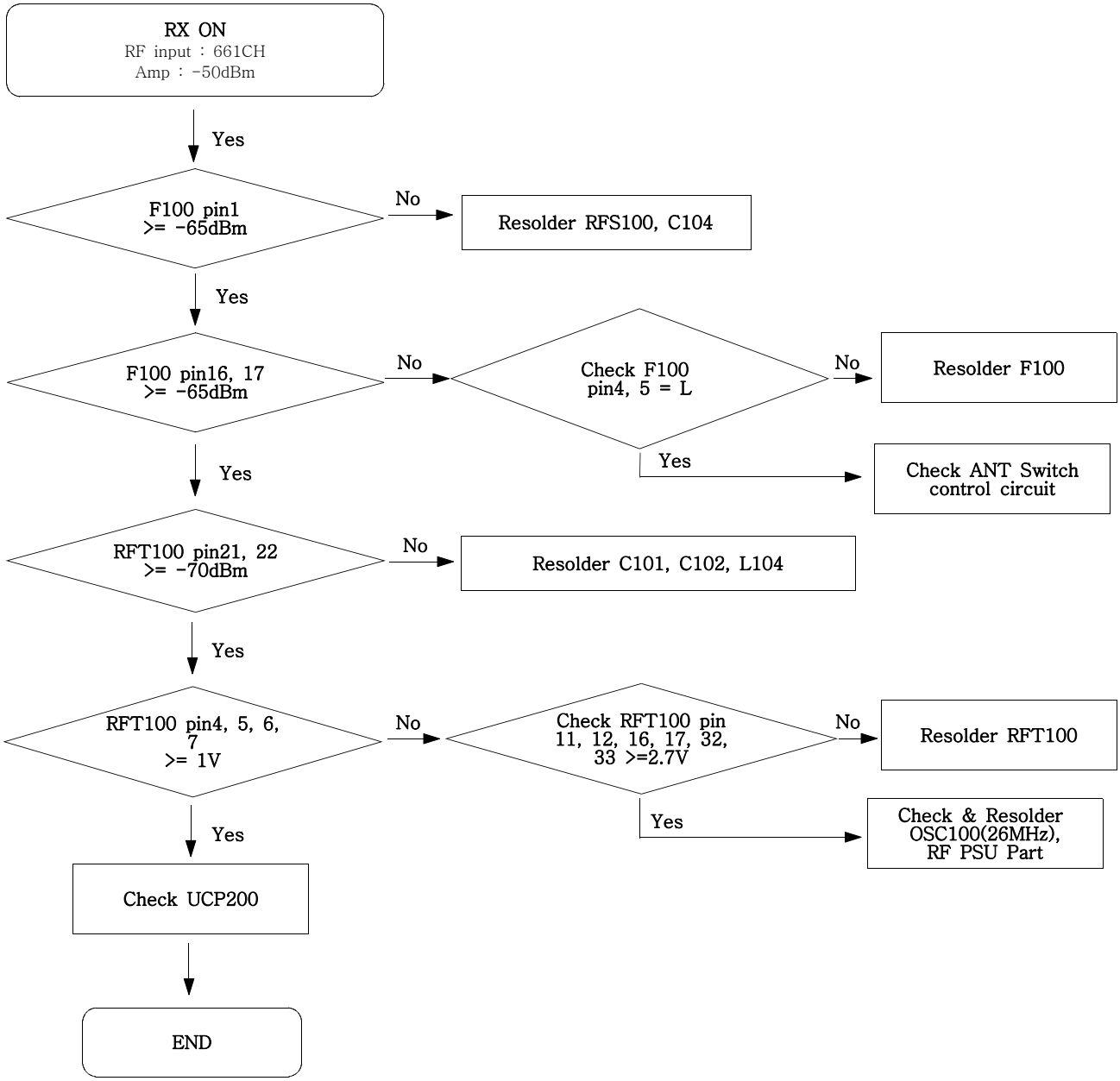

SAMSUNG Proprietary-Contents may change without notice
This Document can not be used without Samsung's authorization

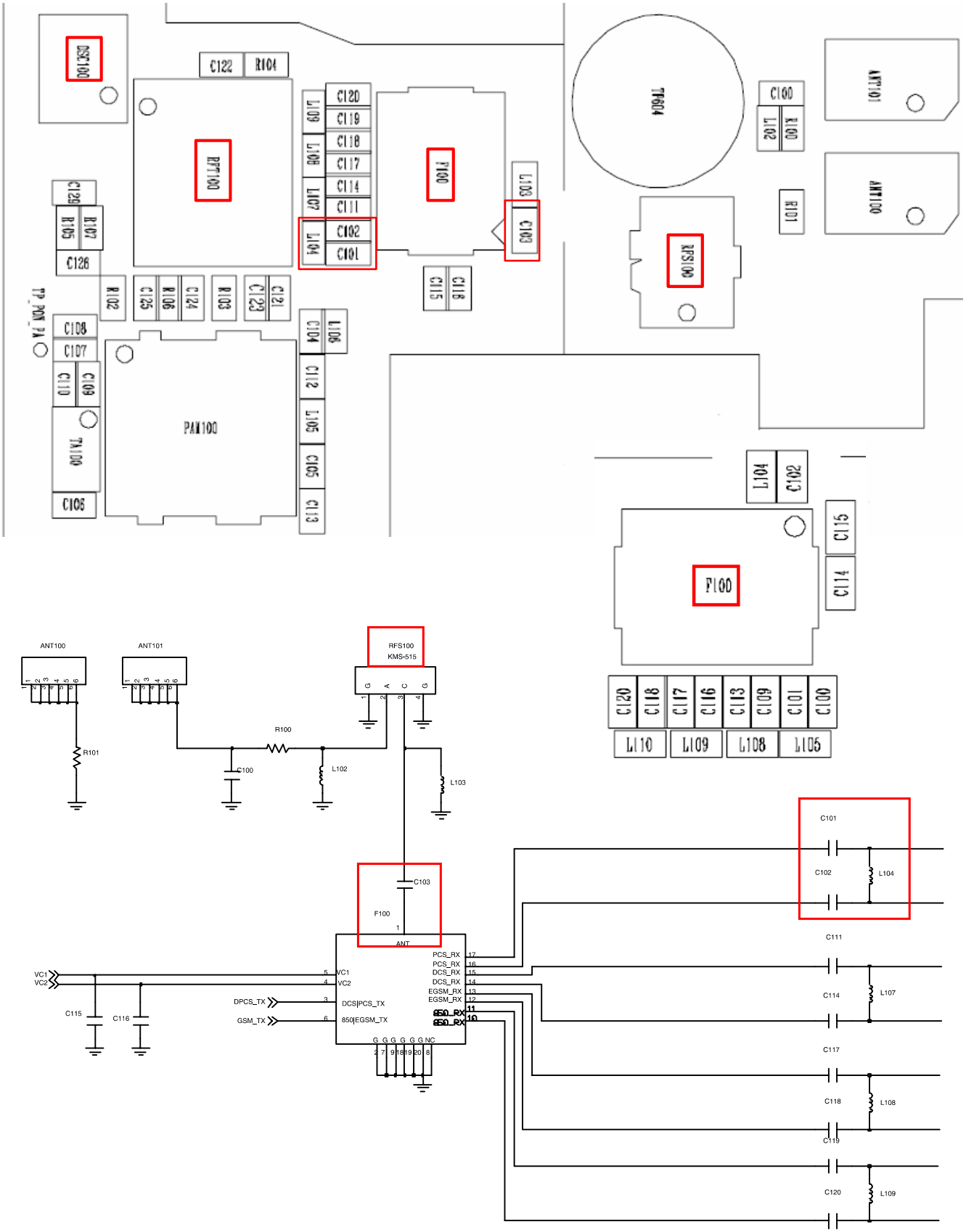

SAMSUNG Proprietary-Contents may change without notice
This Document can not be used without Samsung's authorization

9-18. PCS Transmitter

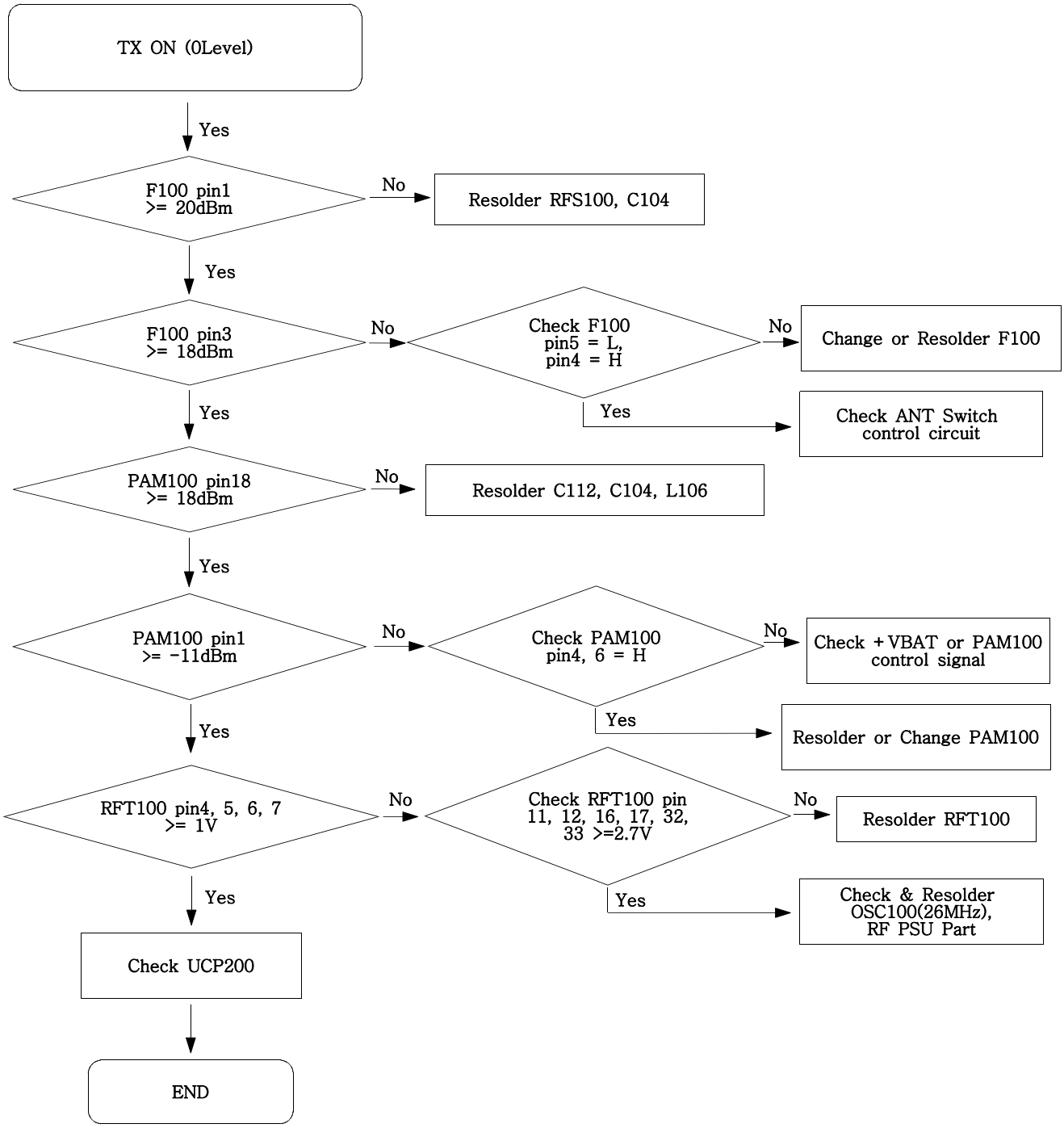

SAMSUNG Proprietary-Contents may change without notice
This Document can not be used without Samsung's authorization

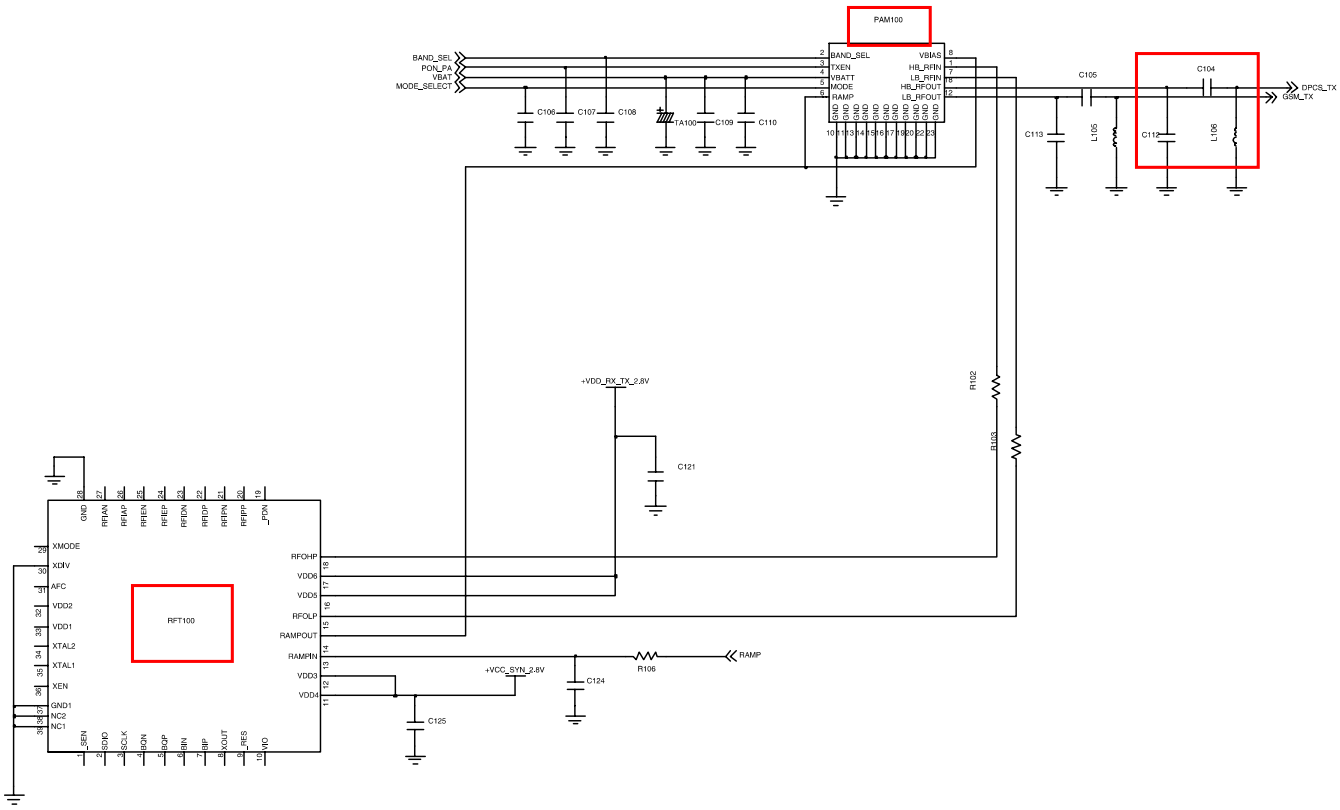

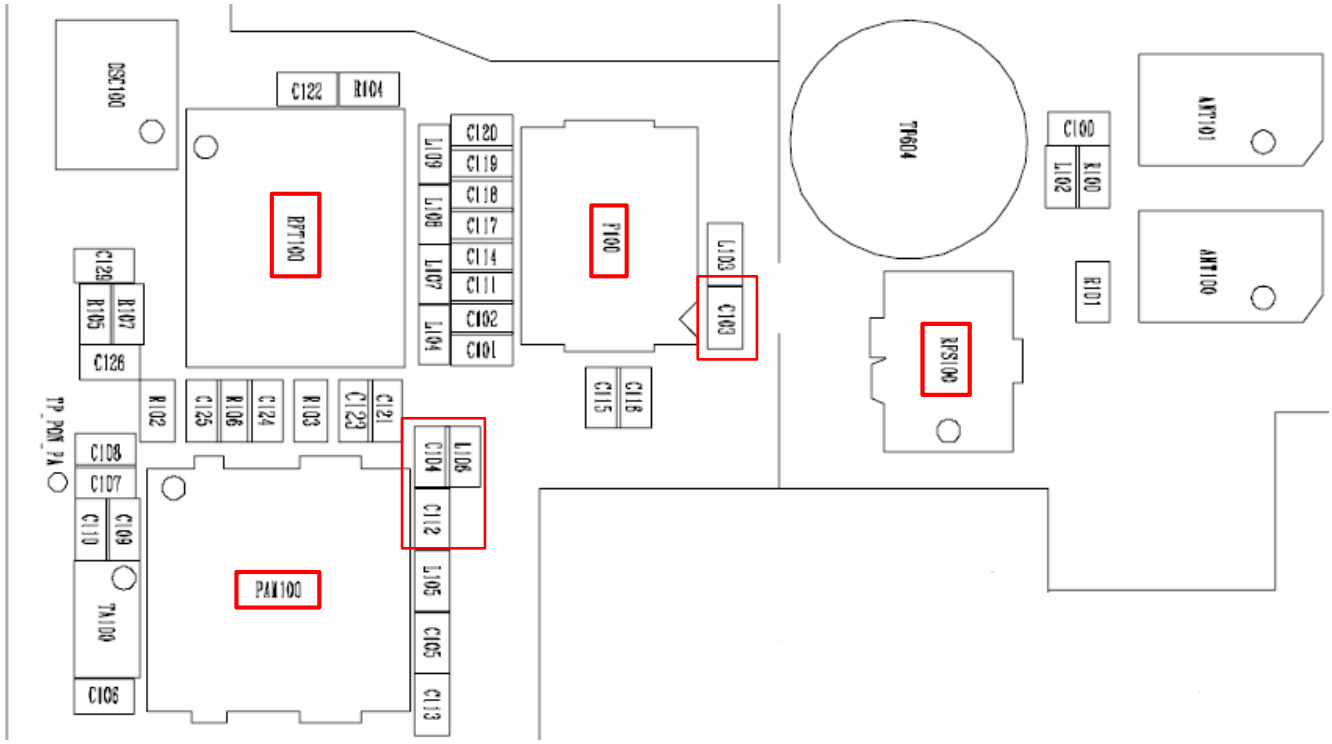

SAMSUNG Proprietary-Contents may change without notice
This Document can not be used without Samsung's authorization

SAMSUNG Proprietary-Contents may change without notice
This Document can not be used without Samsung's authorization

4. Array course control

4-1. Software Adjustments

Test Jig (GH80-03306A)

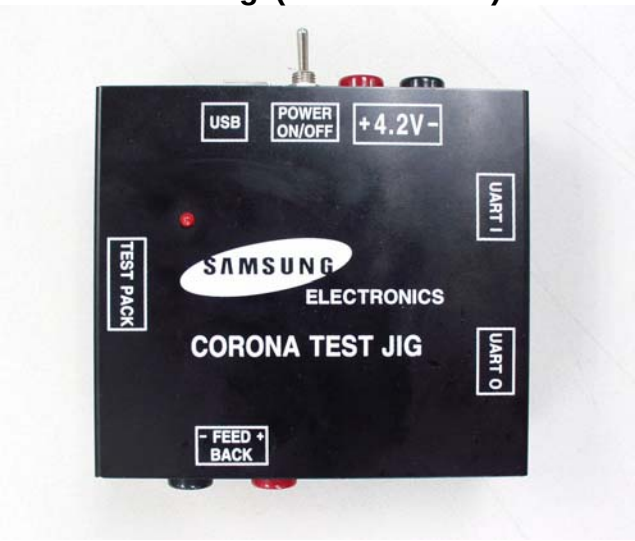

Test Cable (GH39-00838A)

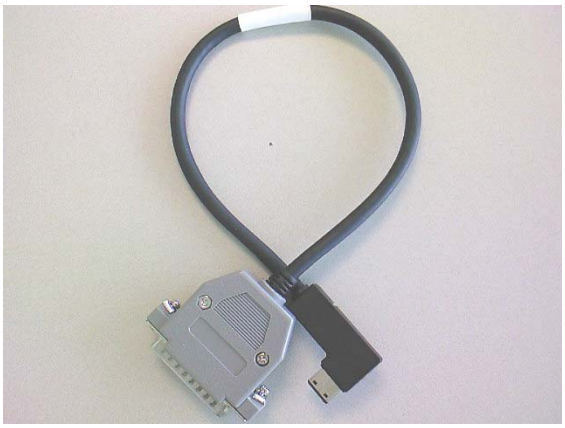

Serial Cable(CSA LL64151-A)

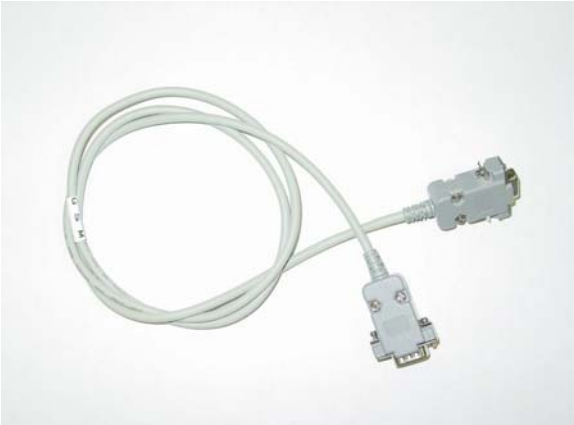

Power Supply Cable

SAMSUNG Proprietary-Contents may change without notice
This Document can not be used without Samsung's authorization

4-2. Software Downloading

4-2-1. Pre-requsite for Downloading

- Downloader Program(OneNAND Downloader v1.4 For PNX5230)
- P260 Mobile Phone
- Data Cable
- Binary file, TFS file

4-2-2. S/W Downloader Program

■ Load the binary download program by executing the "OneNAND Downloader v1.4 For PNX5230"

1. Select the connected serial port and the rate of speed

2. Select the check box, the mode you want to download.
- if the binary file wanted, check only 'BIN'
- if the tfs file wanted, check only 'TFS'
- if all the files wanted, check 'BIN+TFS'

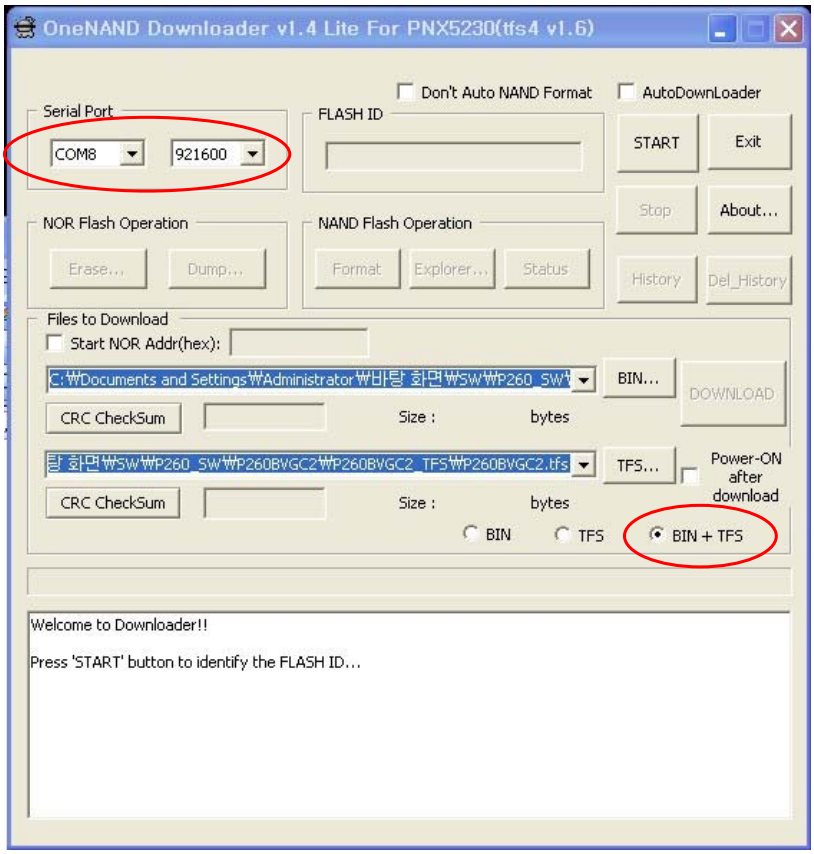

SAMSUNG Proprietary-Contents may change without notice
This Document can not be used without Samsung's authorization

3. Select the file(s) what you want to download

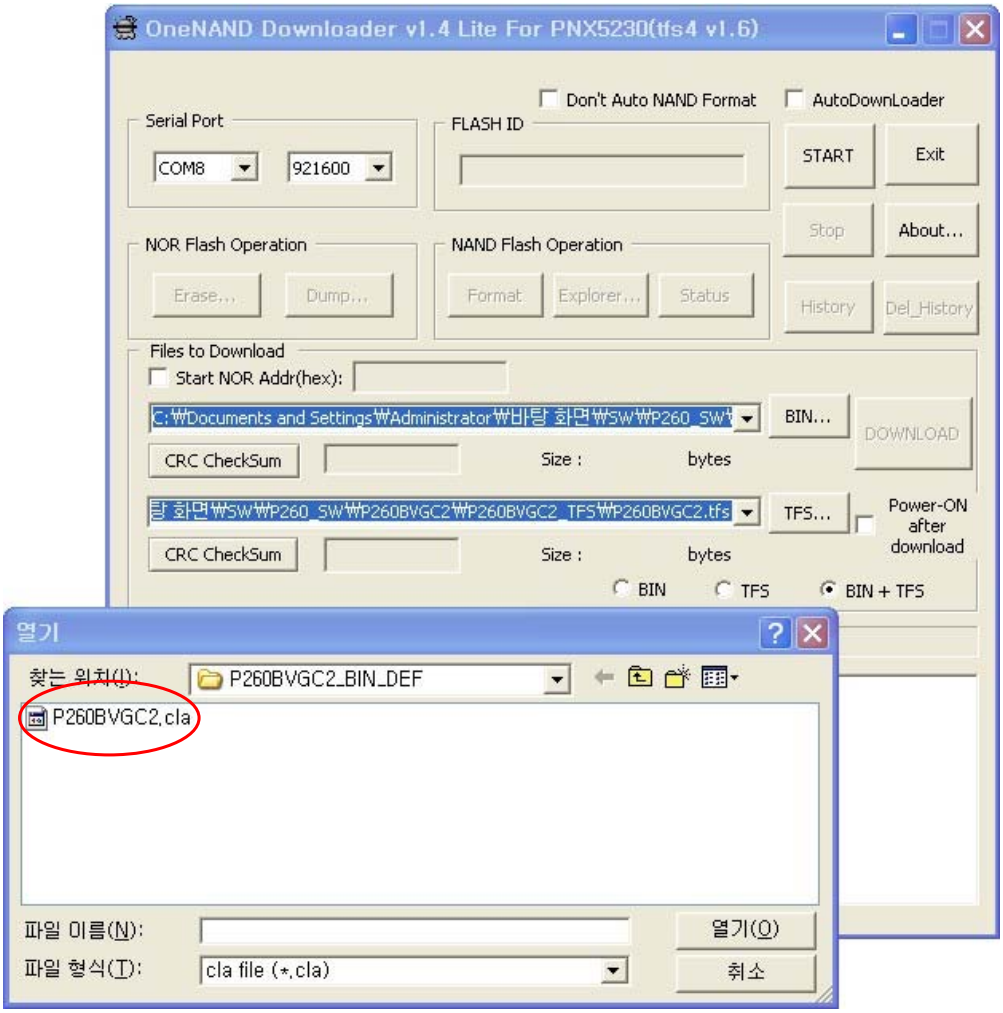

SAMSUNG Proprietary-Contents may change without notice
This Document can not be used without Samsung's authorization

SAMSUNG Proprietary-Contents may change without notice
This Document can not be used without Samsung's authorization

7-1. RF Solution Block Diagram

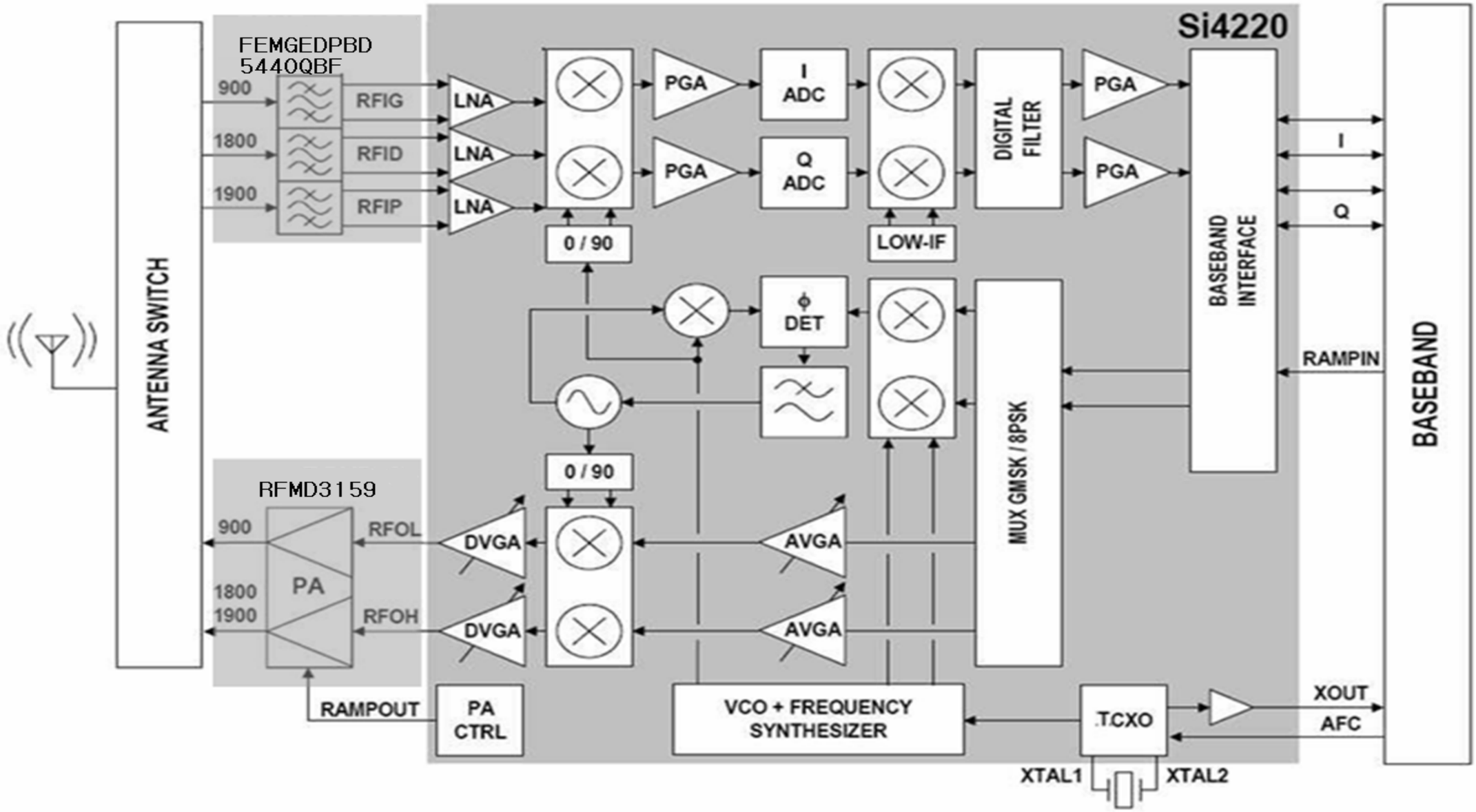

	FESW1	FESW2
Tx(GSM900)	H	L
Tx(DCS1800/1900)	L	H
Rx	L	L

SAMSUNG Proprietary-Contents may change without notice
This Document can not be used without Samsung's authorization

7-2. BT Solution Block Diagram

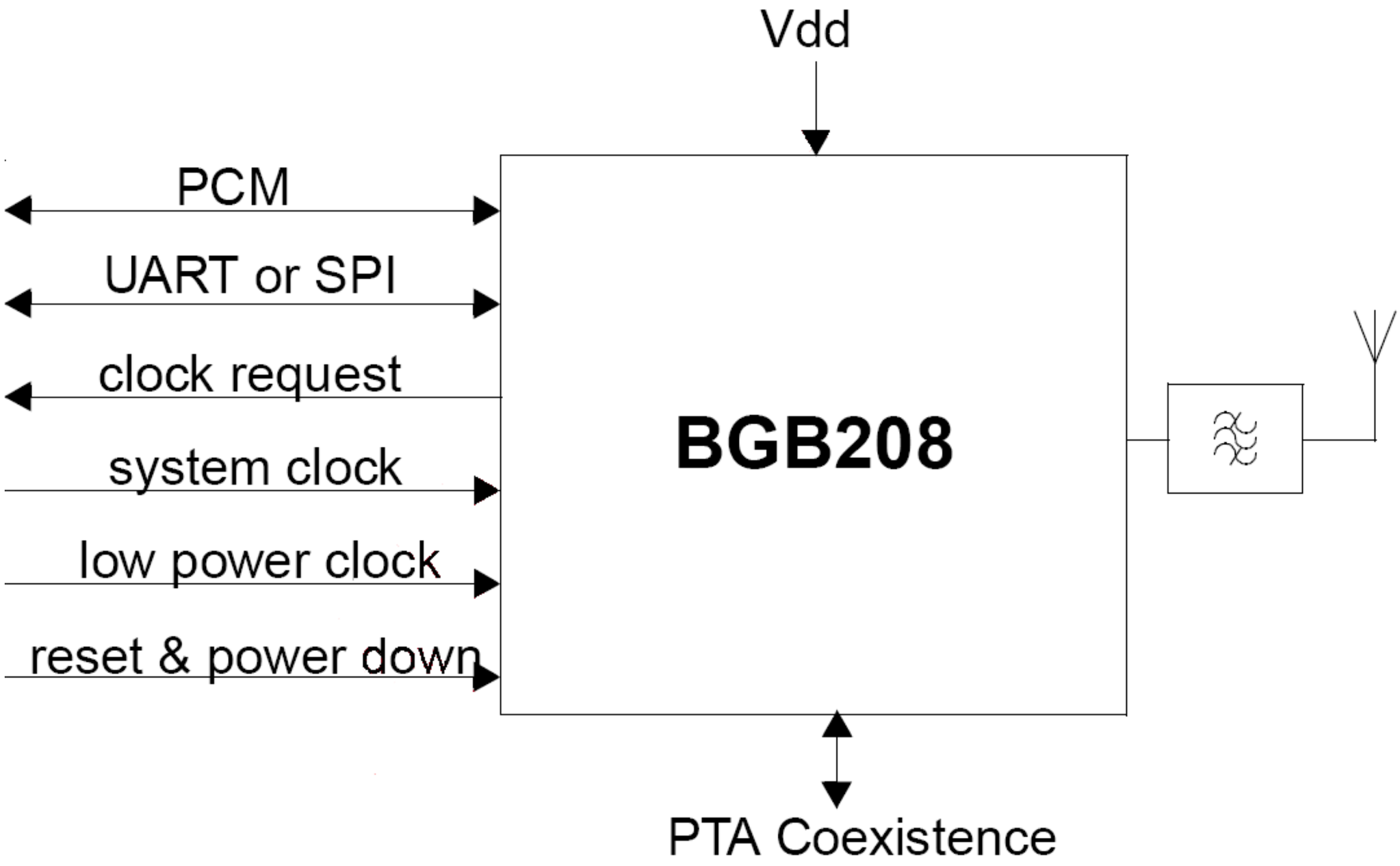

SAMSUNG Proprietary-Contents may change without notice
This Document can not be used without Samsung's authorization

7-3. Base Band Solution Block Diagram

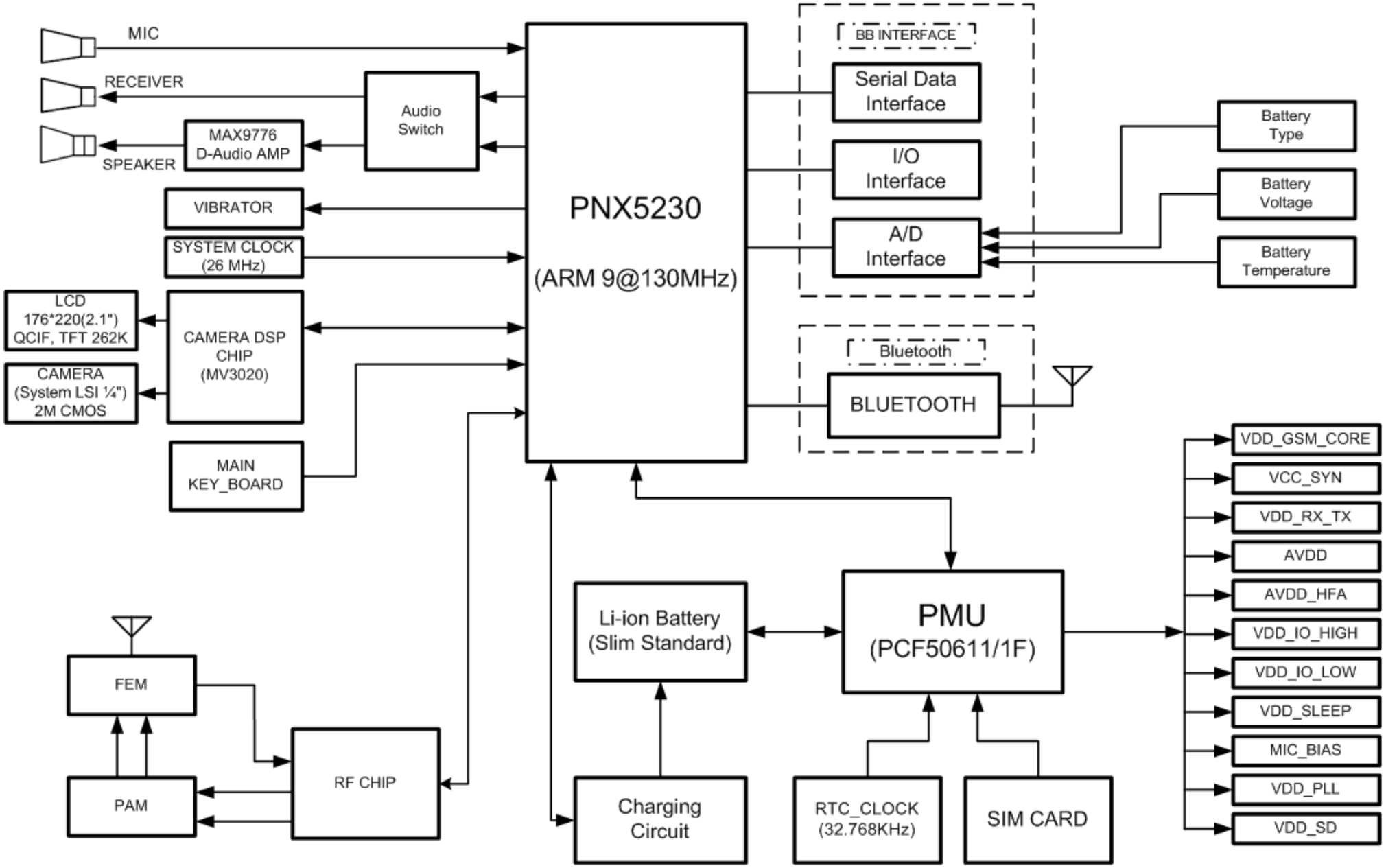

SAMSUNG Proprietary-Contents may change without notice
This Document can not be used without Samsung's authorization

6. MAIN Electrical Parts List

Design LOC	Description	SEC Code	STATUS
ANT104	ANTENNA-CHIP	4202-001329	SA
BAT300	BATTERY-LI(2ND)	4302-001180	SA
L301	BEAD-SMD	3301-001120	SA
L116	BEAD-SMD	3301-001208	SA
L117	BEAD-SMD	3301-001208	SA
L400	BEAD-SMD	3301-001438	SA
L402	BEAD-SMD	3301-001438	SA
L113	BEAD-SMD	3301-001729	SA
L401	BEAD-SMD	3301-001812	SA
L403	BEAD-SMD	3301-001812	SA
L406	BEAD-SMD	3301-001812	SA
L407	BEAD-SMD	3301-001812	SA
L600	BEAD-SMD	3301-001812	SA
CPL100	BLUETOOTH MODULE	4709-001499	SA
C103	C-CER,CHIP	2203-000233	SA
C106	C-CER,CHIP	2203-000233	SA
C107	C-CER,CHIP	2203-000233	SA
C108	C-CER,CHIP	2203-000233	SA
C115	C-CER,CHIP	2203-000233	SA
C116	C-CER,CHIP	2203-000233	SA
C122	C-CER,CHIP	2203-000233	SA
C141	C-CER,CHIP	2203-000233	SA
C309	C-CER,CHIP	2203-000233	SA
C506	C-CER,CHIP	2203-000254	SA
C121	C-CER,CHIP	2203-000278	SA
C142	C-CER,CHIP	2203-000278	SA
C143	C-CER,CHIP	2203-000278	SA
C219	C-CER,CHIP	2203-000425	SA
C311	C-CER,CHIP	2203-000425	SA
C312	C-CER,CHIP	2203-000425	SA
C326	C-CER,CHIP	2203-000425	SA
C425	C-CER,CHIP	2203-000627	SNA
C401	C-CER,CHIP	2203-000679	SA
C408	C-CER,CHIP	2203-000679	SA
C416	C-CER,CHIP	2203-000679	SA
C626	C-CER,CHIP	2203-000679	SA
C631	C-CER,CHIP	2203-000679	SA
C110	C-CER,CHIP	2203-000812	SA
C134	C-CER,CHIP	2203-000812	SA
C140	C-CER,CHIP	2203-000812	SA
C209	C-CER,CHIP	2203-000812	SA
C400	C-CER,CHIP	2203-000812	SA
C415	C-CER,CHIP	2203-000812	SA
C500	C-CER,CHIP	2203-000812	SA
C502	C-CER,CHIP	2203-000812	SA
C512	C-CER,CHIP	2203-000812	SA
C515	C-CER,CHIP	2203-000812	SA
C607	C-CER,CHIP	2203-000812	SA
C608	C-CER,CHIP	2203-000812	SA
C609	C-CER,CHIP	2203-000812	SA
C610	C-CER,CHIP	2203-000812	SA
C611	C-CER,CHIP	2203-000812	SA
C612	C-CER,CHIP	2203-000812	SA

SAMSUNG Proprietary-Contents may change without notice
This Document can not be used without Samsung's authorization

Design LOC	Description	SEC Code	STATUS
C613	C-CER,CHIP	2203-000812	SA
C628	C-CER,CHIP	2203-000812	SA
C501	C-CER,CHIP	2203-000854	SA
C410	C-CER,CHIP	2203-000995	SA
C105	C-CER,CHIP	2203-001201	SA
C124	C-CER,CHIP	2203-001221	SA
C503	C-CER,CHIP	2203-002709	SA
C111	C-CER,CHIP	2203-005050	SA
C114	C-CER,CHIP	2203-005050	SA
C406	C-CER,CHIP	2203-005050	SA
C104	C-CER,CHIP	2203-005053	SA
C133	C-CER,CHIP	2203-005234	SA
C407	C-CER,CHIP	2203-005234	SA
C409	C-CER,CHIP	2203-005234	SA
C100	C-CER,CHIP	2203-005288	SA
C101	C-CER,CHIP	2203-005288	SA
C102	C-CER,CHIP	2203-005288	SA
C117	C-CER,CHIP	2203-005288	SA
C118	C-CER,CHIP	2203-005288	SA
C119	C-CER,CHIP	2203-005288	SA
C120	C-CER,CHIP	2203-005288	SA
C136	C-CER,CHIP	2203-005288	SA
C402	C-CER,CHIP	2203-005288	SA
C403	C-CER,CHIP	2203-005288	SA
C413	C-CER,CHIP	2203-005288	SA
C414	C-CER,CHIP	2203-005288	SA
C123	C-CER,CHIP	2203-005482	SA
C126	C-CER,CHIP	2203-005482	SA
C137	C-CER,CHIP	2203-005482	SA
C138	C-CER,CHIP	2203-005482	SA
C139	C-CER,CHIP	2203-005482	SA
C144	C-CER,CHIP	2203-005482	SA
C149	C-CER,CHIP	2203-005482	SA
C150	C-CER,CHIP	2203-005482	SA
C152	C-CER,CHIP	2203-005482	SA
C153	C-CER,CHIP	2203-005482	SA
C154	C-CER,CHIP	2203-005482	SA
C160	C-CER,CHIP	2203-005482	SA
C161	C-CER,CHIP	2203-005482	SA
C404	C-CER,CHIP	2203-005482	SA
C405	C-CER,CHIP	2203-005482	SA
C411	C-CER,CHIP	2203-005482	SA
C412	C-CER,CHIP	2203-005482	SA
C602	C-CER,CHIP	2203-005482	SA
C129	C-CER,CHIP	2203-005496	SA
C212	C-CER,CHIP	2203-005682	SA
C222	C-CER,CHIP	2203-005731	SA
C202	C-CER,CHIP	2203-005736	SA
C210	C-CER,CHIP	2203-005736	SA
C125	C-CER,CHIP	2203-006048	SA
C132	C-CER,CHIP	2203-006048	SA
C200	C-CER,CHIP	2203-006048	SA
C204	C-CER,CHIP	2203-006048	SA

SAMSUNG Proprietary-Contents may change without notice
This Document can not be used without Samsung's authorization

Design LOC	Description	SEC Code	STATUS
C205	C-CER,CHIP	2203-006048	SA
C206	C-CER,CHIP	2203-006048	SA
C215	C-CER,CHIP	2203-006048	SA
C216	C-CER,CHIP	2203-006048	SA
C220	C-CER,CHIP	2203-006048	SA
C223	C-CER,CHIP	2203-006048	SA
C321	C-CER,CHIP	2203-006048	SA
C513	C-CER,CHIP	2203-006048	SA
C605	C-CER,CHIP	2203-006048	SA
C417	C-CER,CHIP	2203-006137	SA
C418	C-CER,CHIP	2203-006137	SA
C301	C-CER,CHIP	2203-006208	SA
C305	C-CER,CHIP	2203-006208	SA
C307	C-CER,CHIP	2203-006208	SA
C318	C-CER,CHIP	2203-006208	SA
C300	C-CER,CHIP	2203-006257	SA
C302	C-CER,CHIP	2203-006257	SA
C304	C-CER,CHIP	2203-006257	SA
C306	C-CER,CHIP	2203-006257	SA
C308	C-CER,CHIP	2203-006257	SA
C310	C-CER,CHIP	2203-006257	SA
C315	C-CER,CHIP	2203-006257	SA
C423	C-CER,CHIP	2203-006260	SA
C424	C-CER,CHIP	2203-006260	SA
C316	C-CER,CHIP	2203-006324	SA
C313	C-CER,CHIP	2203-006348	SA
C324	C-CER,CHIP	2203-006361	SA
C214	C-CER,CHIP	2203-006399	SA
C217	C-CER,CHIP	2203-006399	SA
C201	C-CER,CHIP	2203-006423	SA
C203	C-CER,CHIP	2203-006423	SA
C208	C-CER,CHIP	2203-006423	SA
C211	C-CER,CHIP	2203-006423	SA
C213	C-CER,CHIP	2203-006423	SA
C317	C-CER,CHIP	2203-006423	SA
C504	C-CER,CHIP	2203-006423	SA
C325	C-CER,CHIP	2203-006474	SA
C109	C-CER,CHIP	2203-006562	SA
C145	C-CER,CHIP	2203-006562	SA
C146	C-CER,CHIP	2203-006562	SA
C148	C-CER,CHIP	2203-006562	SA
C151	C-CER,CHIP	2203-006562	SA
C155	C-CER,CHIP	2203-006562	SA
C156	C-CER,CHIP	2203-006562	SA
C157	C-CER,CHIP	2203-006562	SA
C158	C-CER,CHIP	2203-006562	SA
C159	C-CER,CHIP	2203-006562	SA
C314	C-CER,CHIP	2203-006562	SA
C322	C-CER,CHIP	2203-006562	SA
C323	C-CER,CHIP	2203-006562	SA
C327	C-CER,CHIP	2203-006562	SA
C419	C-CER,CHIP	2203-006562	SA
C420	C-CER,CHIP	2203-006562	SA

SAMSUNG Proprietary-Contents may change without notice
This Document can not be used without Samsung's authorization

Design LOC	Description	SEC Code	STATUS
C421	C-CER,CHIP	2203-006562	SA
C427	C-CER,CHIP	2203-006562	SA
C428	C-CER,CHIP	2203-006562	SA
C429	C-CER,CHIP	2203-006562	SA
C505	C-CER,CHIP	2203-006562	SA
C509	C-CER,CHIP	2203-006562	SA
C600	C-CER,CHIP	2203-006562	SA
C601	C-CER,CHIP	2203-006562	SA
C604	C-CER,CHIP	2203-006562	SA
C606	C-CER,CHIP	2203-006562	SA
C614	C-CER,CHIP	2203-006562	SA
C615	C-CER,CHIP	2203-006562	SA
C616	C-CER,CHIP	2203-006562	SA
C617	C-CER,CHIP	2203-006562	SA
C619	C-CER,CHIP	2203-006562	SA
C620	C-CER,CHIP	2203-006562	SA
C621	C-CER,CHIP	2203-006562	SA
C622	C-CER,CHIP	2203-006562	SA
C623	C-CER,CHIP	2203-006562	SA
C624	C-CER,CHIP	2203-006562	SA
C135	C-CER,CHIP	2203-006681	SA
C510	C-CER,CHIP	2203-006681	SA
C511	C-CER,CHIP	2203-006681	SA
C130	C-CER,CHIP	2203-006824	SA
C131	C-CER,CHIP	2203-006824	SA
C618	C-CER,CHIP	2203-006825	SA
C625	C-CER,CHIP	2203-006825	SA
C629	C-CER,CHIP	2203-006825	SA
C630	C-CER,CHIP	2203-006825	SA
C127	C-CER,CHIP	2203-006838	SA
C128	C-CER,CHIP	2203-006838	SA
C147	C-CER,CHIP	2203-006838	SA
C207	C-CER,CHIP	2203-006838	SA
C320	C-CER,CHIP	2203-006838	SA
C303	C-CER,CHIP	2203-006890	SA
CD301	CONNECTOR-CARD EDGE	3709-001394	SA
SIM301	CONNECTOR-CARD EDGE	3709-001447	SA
RFS101	CONNECTOR-COAXIAL	3705-001358	SA
RFS100	CONNECTOR-COAXIAL	3705-001421	SA
OSC300	CRYSTAL-SMD	2801-004339	SA
OSC101	CRYSTAL-SMD	2801-004506	SA
OSC100	CRYSTAL-SMD	2801-004587	SA
TA400	C-TA,CHIP	2404-001377	SA
TA401	C-TA,CHIP	2404-001377	SA
TA500	C-TA,CHIP	2404-001381	SA
TA300	C-TA,CHIP	2404-001430	SA
TA501	C-TA,CHIP	2404-001430	SA
TA100	C-TA,CHIP	2404-001474	SA
D502	DIODE-TVS	0406-001215	SA
D400	DIODE-TVS	0406-001223	SA
D401	DIODE-TVS	0406-001223	SA
D600	DIODE-TVS	0406-001231	SA
D601	DIODE-TVS	0406-001231	SA

SAMSUNG Proprietary-Contents may change without notice
This Document can not be used without Samsung's authorization

Design LOC	Description	SEC Code	STATUS
D602	DIODE-TVS	0406-001231	SA
D603	DIODE-TVS	0406-001231	SA
D604	DIODE-TVS	0406-001231	SA
D605	DIODE-TVS	0406-001231	SA
D606	DIODE-TVS	0406-001231	SA
D607	DIODE-TVS	0406-001231	SA
D608	DIODE-TVS	0406-001231	SA
D609	DIODE-TVS	0406-001231	SA
D610	DIODE-TVS	0406-001231	SA
D611	DIODE-TVS	0406-001231	SA
D612	DIODE-TVS	0406-001231	SA
D613	DIODE-TVS	0406-001231	SA
D402	DIODE-TVS	0406-001254	SA
D403	DIODE-TVS	0406-001254	SA
D500	DIODE-TVS	0406-001254	SA
D501	DIODE-TVS	0406-001254	SA
D300	DIODE-TVS	0406-001256	SA
ZD300	DIODE-ZENER	0403-001547	SA
ZD500	DIODE-ZENER	0403-001547	SA
ZD501	DIODE-ZENER	0403-001547	SA
F100	DUPLEXER-FEM	2911-000092	SA
DUF100	FILTER-CERAMIC	2903-001372	SA
F200	FILTER-EMI SMD	2901-001316	SA
F500	FILTER-EMI SMD	2901-001408	SA
F600	FILTER-EMI/ESD	2901-001435	SA
F601	FILTER-EMI/ESD	2901-001435	SA
F602	FILTER-EMI/ESD	2901-001435	SA
F603	FILTER-EMI/ESD	2901-001435	SA
F604	FILTER-EMI/ESD	2901-001469	SA
F605	FILTER-EMI/ESD	2901-001469	SA
DUF101	FILTER-LC	2909-001299	SA
BTC500	HEADER-BATTERY	3711-006249	SA
CN600	HEADER-BOARD TO BOARD	3711-005605	SA
HEA1	HEADER-BOARD TO BOARD	3711-006141	SA
MV500	IC ASIC	GH13-00032A	SA
PAM400	IC-AUDIO AMP	1201-002511	SA
U201	IC-CMOS LOGIC	0801-003022	SA
U202	IC-CMOS LOGIC	0801-003079	SA
UCP200	IC-COMM. CONTROLLER	1205-003082	SA
U604	IC-DC/DC CONVERTER	1203-003708	SA
U104	IC-DC/DC CONVERTER	1203-004554	SA
U601	IC-HALL EFFECT S/W	1009-001020	SA
UME200	IC-MCP	1108-000102	SA
U625	IC-MULTI REG.	1203-004291	SA
U102	IC-POSI.FIXED REG.	1203-003688	SA
U300	IC-POSI.FIXED REG.	1203-003737	SA
U622	IC-POSI.FIXED REG.	1203-003737	SA
U627	IC-POSI.FIXED REG.	1203-003787	SA
U105	IC-POSI.FIXED REG.	1203-004419	SA
U602	IC-POSI.FIXED REG.	1203-004776	SA
U623	IC-POSI.FIXED REG.	1203-004776	SA
PAM100	IC-POWER AMP	1201-002423	SA
PM300	IC-POWER SUPERVISOR	1203-004382	SA

SAMSUNG Proprietary-Contents may change without notice
This Document can not be used without Samsung's authorization

Design LOC	Description	SEC Code	STATUS
RFT100	IC-TRANSCEIVER	1205-003093	SA
L106	INDUCTOR-SMD	2703-001747	SA
L105	INDUCTOR-SMD	2703-001990	SA
L115	INDUCTOR-SMD	2703-002313	SA
L103	INDUCTOR-SMD	2703-002314	SA
L404	INDUCTOR-SMD	2703-002314	SA
L405	INDUCTOR-SMD	2703-002314	SA
R100	INDUCTOR-SMD	2703-002506	SA
L108	INDUCTOR-SMD	2703-002558	SA
L109	INDUCTOR-SMD	2703-002558	SA
L107	INDUCTOR-SMD	2703-002608	SA
L104	INDUCTOR-SMD	2703-002636	SA
L300	INDUCTOR-SMD	2703-003113	SA
L110	INDUCTOR-SMD	2703-003184	SA
LED600	LED	0601-002160	SA
LED601	LED	0601-002160	SA
ANT100	NPR-CONTACT INTENA	GH71-06620A	SA
ANT101	NPR-CONTACT INTENA	GH71-06620A	SA
ANT102	NPR-CONTACT INTENA	GH71-06620A	SA
ANT103	NPR-CONTACT INTENA	GH71-06620A	SA
R133	R-CHIP	2007-000140	SA
R316	R-CHIP	2007-000140	SA
R509	R-CHIP	2007-000141	SA
R510	R-CHIP	2007-000141	SA
R117	R-CHIP	2007-000148	SA
R128	R-CHIP	2007-000148	SA
R130	R-CHIP	2007-000148	SA
R228	R-CHIP	2007-000159	SA
R202	R-CHIP	2007-000162	SA
R222	R-CHIP	2007-000162	SA
R604	R-CHIP	2007-000162	SA
R607	R-CHIP	2007-000162	SA
R611	R-CHIP	2007-000162	SA
R612	R-CHIP	2007-000162	SA
R109	R-CHIP	2007-000170	SA
R126	R-CHIP	2007-000170	SA
R200	R-CHIP	2007-000170	SA
R201	R-CHIP	2007-000170	SA
R508	R-CHIP	2007-000170	SA
R101	R-CHIP	2007-000171	SA
R105	R-CHIP	2007-000171	SA
R108	R-CHIP	2007-000171	SA
R110	R-CHIP	2007-000171	SA
R111	R-CHIP	2007-000171	SA
R112	R-CHIP	2007-000171	SA
R113	R-CHIP	2007-000171	SA
R120	R-CHIP	2007-000171	SA
R132	R-CHIP	2007-000171	SA
R203	R-CHIP	2007-000171	SA
R212	R-CHIP	2007-000171	SA
R218	R-CHIP	2007-000171	SA
R318	R-CHIP	2007-000171	SA
R409	R-CHIP	2007-000171	SA

SAMSUNG Proprietary-Contents may change without notice
This Document can not be used without Samsung's authorization

Design LOC	Description	SEC Code	STATUS
R410	R-CHIP	2007-000171	SA
R411	R-CHIP	2007-000171	SA
R412	R-CHIP	2007-000171	SA
R514	R-CHIP	2007-000171	SA
R602	R-CHIP	2007-000171	SA
R605	R-CHIP	2007-000171	SA
R606	R-CHIP	2007-000171	SA
R608	R-CHIP	2007-000171	SA
R613	R-CHIP	2007-000171	SA
R414	R-CHIP	2007-000174	SA
R415	R-CHIP	2007-000174	SA
R400	R-CHIP	2007-000242	SA
R401	R-CHIP	2007-000242	SA
R404	R-CHIP	2007-000242	SA
R405	R-CHIP	2007-000242	SA
R106	R-CHIP	2007-001313	SA
R501	R-CHIP	2007-001339	SA
R312	R-CHIP	2007-002796	SA
R406	R-CHIP	2007-002796	SA
R407	R-CHIP	2007-002796	SA
R600	R-CHIP	2007-002965	SA
R601	R-CHIP	2007-002965	SA
R225	R-CHIP	2007-007014	SA
R119	R-CHIP	2007-007099	SA
R138	R-CHIP	2007-007107	SA
R216	R-CHIP	2007-007107	SA
R300	R-CHIP	2007-007107	SA
R311	R-CHIP	2007-007107	SA
R315	R-CHIP	2007-007107	SA
R317	R-CHIP	2007-007107	SA
R408	R-CHIP	2007-007107	SA
R500	R-CHIP	2007-007135	SA
R502	R-CHIP	2007-007135	SA
R503	R-CHIP	2007-007135	SA
R107	R-CHIP	2007-007136	SA
R213	R-CHIP	2007-007137	SA
R214	R-CHIP	2007-007137	SA
R122	R-CHIP	2007-007139	SA
R136	R-CHIP	2007-007142	SA
R137	R-CHIP	2007-007142	SA
R223	R-CHIP	2007-007142	SA
R504	R-CHIP	2007-007142	SA
R413	R-CHIP	2007-007197	SA
R226	R-CHIP	2007-007306	SA
R104	R-CHIP	2007-007318	SA
R507	R-CHIP	2007-007334	SA
R314	R-CHIP	2007-007538	SA
R301	R-CHIP	2007-007573	SA
R204	R-CHIP	2007-007741	SA
R211	R-CHIP	2007-007741	SA
R511	R-CHIP	2007-007741	SA
R102	R-CHIP	2007-007798	SA
R103	R-CHIP	2007-007798	SA

SAMSUNG Proprietary-Contents may change without notice
This Document can not be used without Samsung's authorization

Design LOC	Description	SEC Code	STATUS
R512	R-CHIP	2007-008055	SA
R303	R-CHIP	2007-008354	SA
R208	R-CHIP	2007-008419	SA
R302	R-CHIP	2007-008542	SA
R304	R-CHIP	2007-008542	SA
R305	R-CHIP	2007-008542	SA
R306	R-CHIP	2007-008542	SA
R307	R-CHIP	2007-008542	SA
R505	R-CHIP	2007-008542	SA
R506	R-CHIP	2007-008542	SA
R310	R-CHIP	2007-008588	SA
R309	R-CHIP	2007-008648	SA
R513	R-CHIP	2007-008800	SA
R206	R-CHIP	2007-009314	SA
R207	R-CHIP	2007-009314	SA
R313	R-CHIP	2007-009314	SA
IFC500	SOCKET-INTERFACE	3710-002499	SA
VR500	THERMISTOR-NTC	1404-001221	SA
TR200	TR-DIGITAL	0504-001151	SA
TR300	TR-DIGITAL	0504-001151	SA
CPL101	W-LAN MODULE	4709-001448	SA

SAMSUNG Proprietary-Contents may change without notice
This Document can not be used without Samsung's authorization

3. Operation Instruction and Installation

Main Function

-2 Mega pixel Camera

-262K Color TFT QCIF Screen (2.1", 176×220)

-Video Recording & Messaging

-MP3, USB 2.0

-Bluetooth Wireless Technology

-Multimedia Message Service (MMS)

-External Memory

-E-mail

-Voice recorder

-Java / WAP2.0

-Tri-band(900/1800/1900MHz)

-Wifi

-UMA 1.0.3

SAMSUNG Proprietary-Contents may change without notice

This Document can not be used without Samsung's authorization

SAMSUNG Proprietary-Contents may change without notice
This Document can not be used without Samsung's authorization

10. Reference data

Reference Abbreviate

- **AAC**: Advanced Audio Coding.
- **AVC** : Advanced Video Coding.
- **BER** : Bit Error Rate
- **BPSK**: Binary Phase Shift Keying
- **CA** : Conditional Access
- **CDM** : Code Division Multiplexing
- **C/I** : Carrier to Interference
- **DMB** : Digital Multimedia Broadcasting
- **EN** : European Standard
- **ES** : Elementary Stream
- **ETSI**: European Telecommunications Standards Institute
- **MPEG**: Moving Picture Experts Group
- **PN** : Pseudo-random Noise
- **PS** : Pilot Symbol
- **QPSK**: Quadrature Phase Shift Keying
- **RS** : Reed-Solomon
- **SI** : Service Information
- **TDM** : Time Division Multiplexing
- **TS** : Transport Stream

SAMSUNG Proprietary-Contents may change without notice
This Document can not be used without Samsung's authorization

SAMSUNG Proprietary-Contents may change without notice
This Document can not be used without Samsung's authorization